WAYNE STATE UNIVERSITY

MATTHAEI TENNIS COURT RENOVATIONS

5401 JOHN C. LODGE SERVICE DR, DETROIT, MI 48202

ISSUED FOR: **BID**

03/22/2023

WSU PROJECT #080-353136

DRAWING INDEX

PROJECT SUMMARY

THIS PROJECT INCLUDES REMOVAL OF EXISTING TENNIS COURT SURFACE AND ASPHALT PAVEMENT AS WELL AS DEMOLITION OF EXISTING FENCING AND COURT NETTING. PROPOSED WORK INCLUDES THE INSTALLATION OF NEW ACRYLIC SURFACING AND ASPHALT PAVEMENT, AS WELL AS NEW PERIMETER FENCING AND TENNIS COURT NETTING.

VICINITY MAP

NORTH

OSPORTS
Ohio | Florida | Michigan | Tennessee
(216) 861-2020 www.osborn-eng.com

OSBORN ENGINEERING
Ohio | Florida | Michigan | Tennessee
(216) 861-2020 www.osborn-eng.com

MATTHAEI TENNIS COURT RENOVATION

WAYNE STATE UNIVERSITY

42 WEST WARREN AVENUE
DETROIT, MICHIGAN 44802
(313) 577-2424

STATE OF OHIO
SCOTT A. VURA
E-63375
REGISTERED PROFESSIONAL ENGINEER
03/22/23

TAG	ISSUED	DATE
A	ISSUED FOR BID	03/22/23

DRAWN BY	CRS
CHECKED BY	DRK
CLIENT PROJ NO.	080-353136
OSBORN PROJ NO.	J20221416.000

TITLE SHEET

DRAWING NO.

G-001

P:\Wayne State University\J20221416.000_Tennis_Court_Reno\Drawings\Civil\Sheet Drawings\J20221416.000-G-001.dwg
3/20/2023 9:09 AM Stopp, Chase

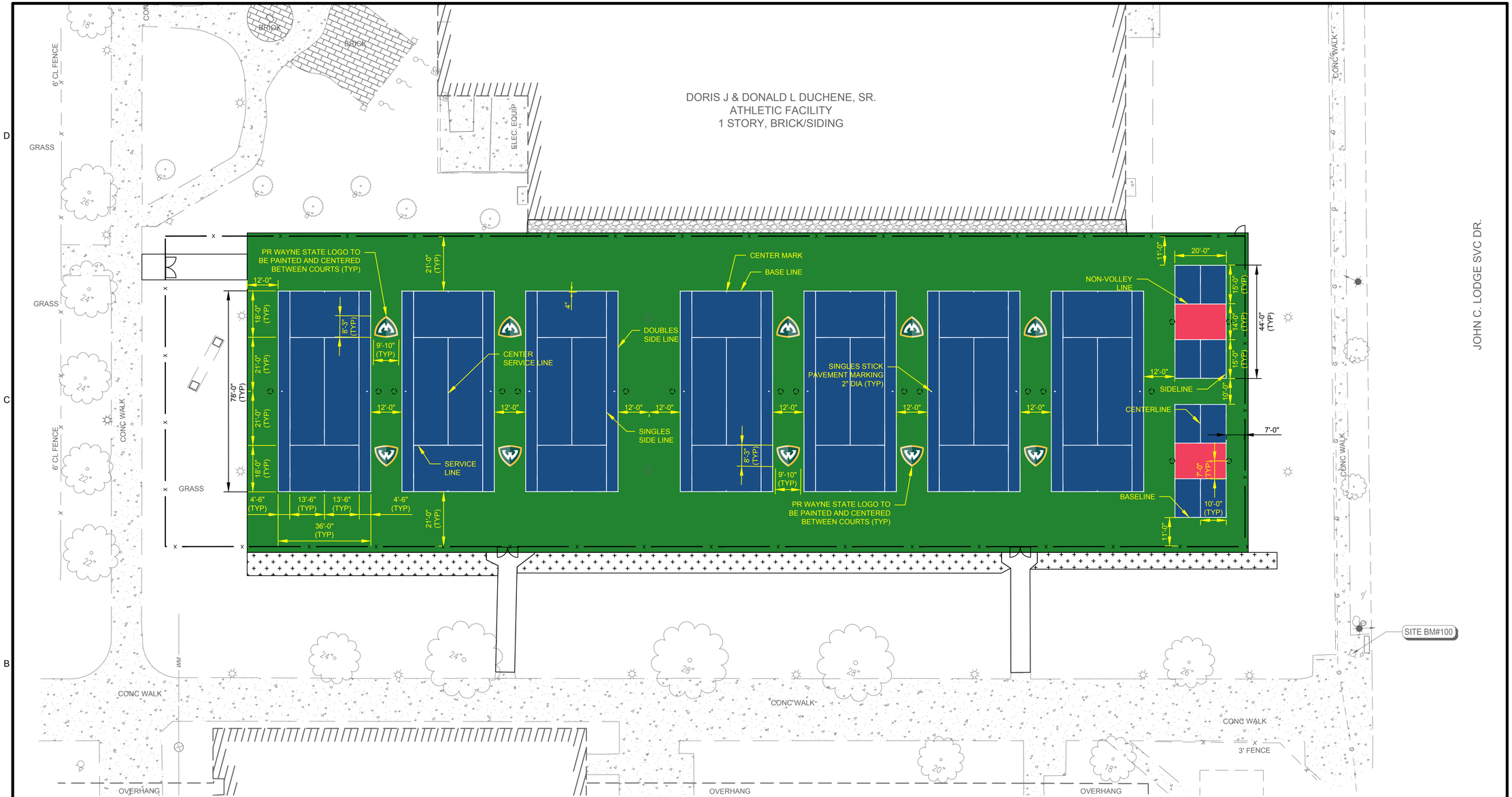

JOHN C. LODGE SVC DR.

STRIPING NOTES

1. SEE SHEET C-801 FOR DETAILS ON TENNIS COURT AND PICKLEBALL LAYOUTS
2. ALL MARKINGS SHALL BE IN ADHERENCE TO ALL NCAA AND USTA REGULATIONS
3. SEE SHEET C-101 SITE PLAN FOR FENCE AND GATE LOCATIONS.

LEGEND

- PR TENNIS AND PICKLEBALL PLAYING AREA COURT SURFACE (20,500± SF)
- PR COURT LINES
- PR COURT RUNOUTS (22,000± SF)
- PR PICKLEBALL NON-VOLLEY ZONE (500± SF)

NORTH

GRAPHIC SCALE

20 0 10 20

(IN FEET)
1 inch = 20 ft.

OSPORTS
Ohio | Florida | Michigan | Tennessee
(216) 861-2020 www.osborn-eng.com

OSBORN ENGINEERING
Ohio | Florida | Michigan | Tennessee
(216) 861-2020 www.osborn-eng.com

MATTHAEI TENNIS COURT RENOVATION

WAYNE STATE UNIVERSITY

42 WEST WARREN AVENUE
DETROIT, MICHIGAN 44802
(313) 577-2424

STATE OF OHIO
SCOTT A. VURA
E-63375
REGISTERED
PROFESSIONAL ENGINEER
03/22/23

TAG	ISSUED	DATE
A	ISSUED FOR BID	03/22/23

DRAWN BY CRS
CHECKED BY DRK
CLIENT PROJ NO. 080-353136
OSBORN PROJ NO. J20221416.000

STRIPING PLAN

DRAWING NO.
C-100

P:\Wayne State University\J20221416.000_Tennis_Court_Reno\Drawings\Civil\Sheet Drawings\J20221416.000-C-100.dwg
3/21/2023 3:36 PM Stopp, Chase

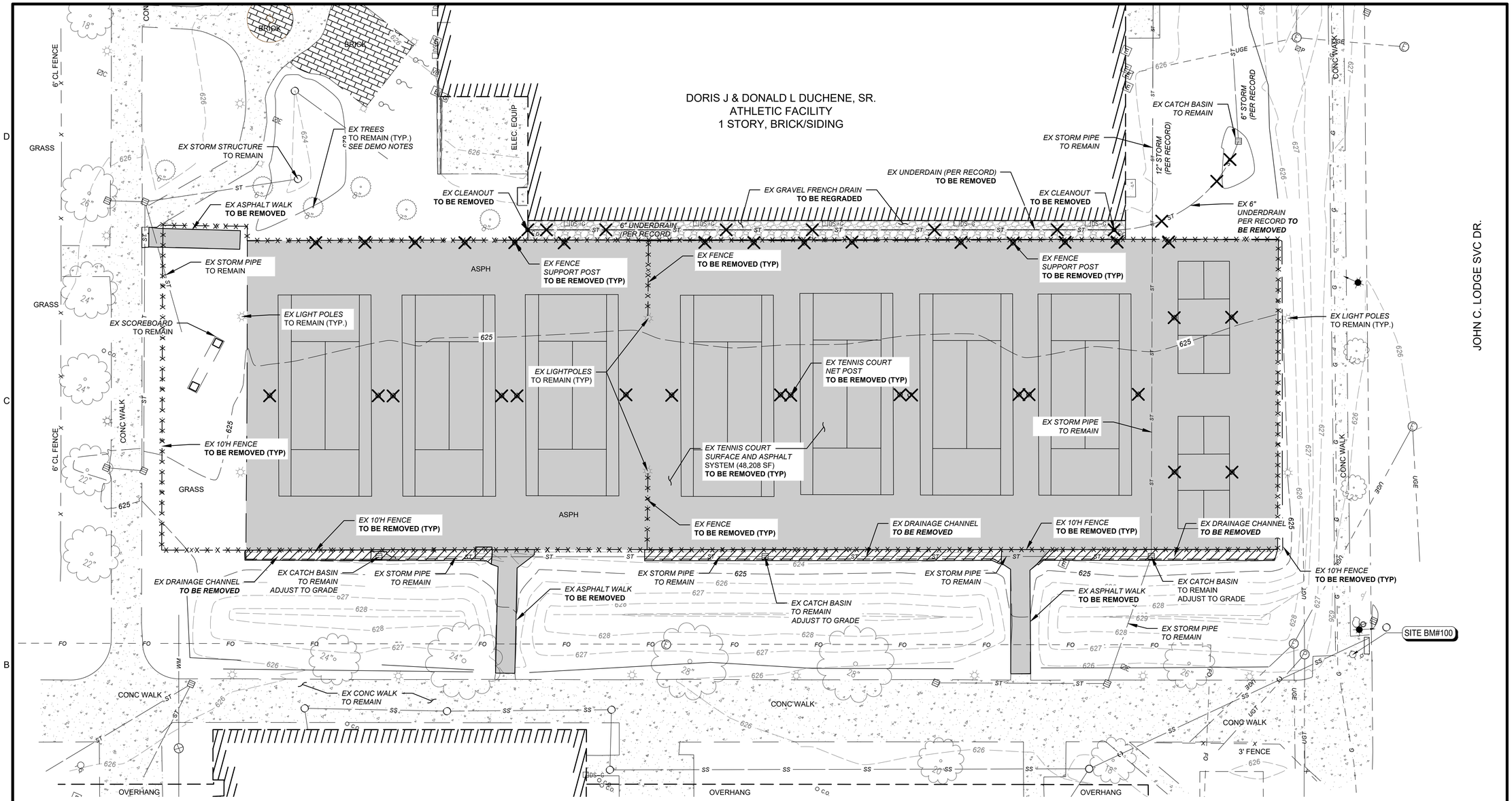

JOHN C. LODGE SVC DR.

SURVEY NOTES

1. *SURVEY PROVIDED BY SPALDING DEDECKER IN OCTOBER 2022.*
2. *BASIS OF BEARINGS IS THE STATE PLANE COORDINATE SYSTEM, MICHIGAN SOUTH ZONE (2013) BASED ON NAD83.*
3. *VERTICAL DATUM FOR SURVEY IS NAVD 1988 BASED ON GPS OBSERVATIONS USING THE MDOT CONTINUOUSLY OPERATING REFERENCE STATIONS (CORS).*
4. *UTILITY LOCATIONS AS SHOWN ARE APPROXIMATE. CONTRACTOR TO VERIFY LOCATIONS IN FIELD AND NOTIFY THE OWNER AND ENGINEER OF ANY DEVIATIONS FROM THE PLANS.*

DEMOLITION NOTES

1. UNDERGROUND UTILITIES EXIST IN THE CONSTRUCTION AREA. CONTRACTOR TO CONTACT MISS DIG 811 AT 1-800-482-7171 PRIOR TO ANY CONSTRUCTION ACTIVITIES TO PHYSICALLY MARK OUT LINES.
2. CONTRACTOR TO PROTECT EXISTING PAVEMENT, CURB, AND BOUNDARY FENCING AND REPLACE IN-KIND IF REMOVED FOR CONSTRUCTION ACCESS OR DELIVERIES.
3. OWNER AND CONTRACTOR TO DOCUMENT EXISTING CONDITIONS WITH PHOTOGRAPHS AND NOTES AS A BASIS FOR RESTORATION.
4. CONTRACTOR TO REMOVE EXISTING TENNIS COURT PLAYING SYSTEM DOWN TO EXISTING AGGREGATE BASE. CONTRACTOR IS RESPONSIBLE FOR REMEDYING EXISTING AGGREGATE BASE IF SECTIONS DO NOT MEET ASPHALT BASE STANDARDS. REFER TO SPEC FOR PROOF ROLL TESTING REQUIREMENTS.
5. CONTRACTOR TO PROTECT ALL EXISTING TREES THROUGHOUT CONSTRUCTION.
6. CATCH BASINS ON SOUTH SIDE OF TENNIS COURTS SHALL BE ADJUSTED TO GRADE. SEE C-102 FOR ADJUSTMENTS.
7. ALL EX FENCE POST TO BE CUT DOWN TO GRADE. PROPOSED FENCE POST TO BE PLACED AROUND THE EXISTING CUT TO GRADE POST. EXISTING CORNER POST AND GATE POST MAY NEED TO BE FULLY REMOVED TO FACILITATE PR FENCE CONSTRUCTION. SEE DETAIL SHEET C-802.
8. SITE BENCHMARK #100 IS CLOSE TO PROJECT SITE. CONTRACTOR TO ENSURE PROTECTION OF ALL BENCHMARKS THROUGH CONSTRUCTION.

LEGEND

ITEM TO BE REMOVED	×
EX TENNIS COURT SURFACING AND/OR ASPHALT PAVEMENT SYSTEM TO BE REMOVED (48,208 SF)	
EX ASPHALT DRAINAGE CHANNEL TO BE REMOVED (1,350 SF)	
EXISTING FENCE TO BE REMOVED	-×-×-×-

NORTH

GRAPHIC SCALE

20 0 10 20

(IN FEET)

1 inch = 20 ft.

OSPORTS
Ohio | Florida | Michigan | Tennessee
(216) 861-2020 www.osborn-eng.com

OSBORN ENGINEERING
Ohio | Florida | Michigan | Tennessee
(216) 861-2020 www.osborn-eng.com

MATTHAEI TENNIS COURT RENOVATION

WAYNE STATE UNIVERSITY

42 WEST WARREN AVENUE
DETROIT, MICHIGAN 44802
(313) 577-2424

STATE OF OHIO
SCOTT A. VURA
E-63375
REGISTERED PROFESSIONAL ENGINEER
03/22/23

TAG	ISSUED	DATE
A	ISSUED FOR BID	03/22/23

DRAWN BY	CRS
CHECKED BY	DRK
CLIENT PROJ NO.	080-353136
OSBORN PROJ NO.	J20221416.000

DEMO PLAN

DRAWING NO.

CD-101

P:\Wayne State University\J20221416.000_Tennis_Court_Reno\Drawings\Civil\Sheet Drawings\J20221416.000-CD-101.dwg
3/20/2023 9:09 AM Stopp, Chase

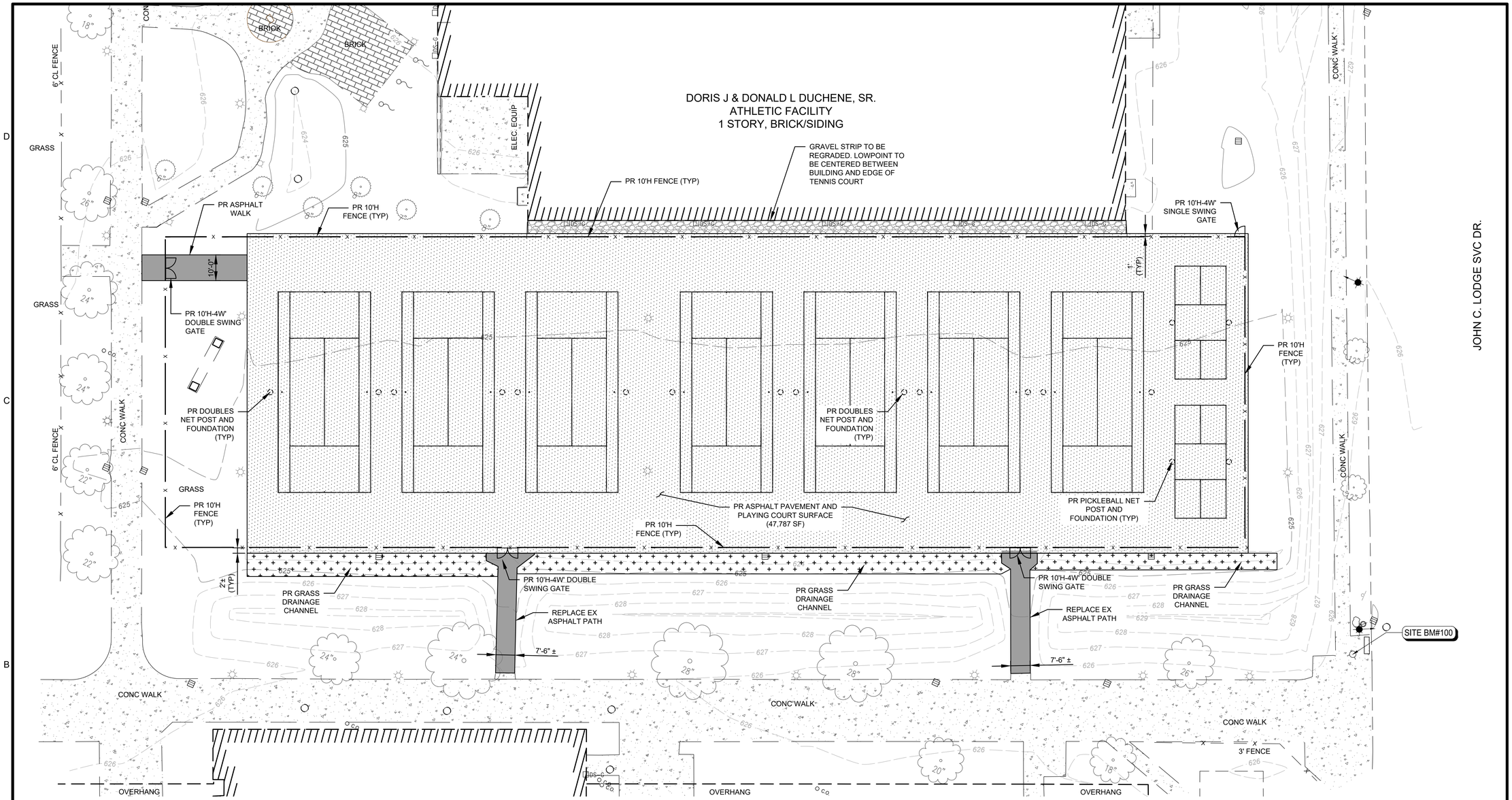

NOTES:

1. SEE SHEET C-801 AND C-802 FOR COURT DETAILS.
2. REFER TO C-100 FOR COURT LINES AND MARKINGS.
3. SEE DETAIL ON SHEET C-801 AND C-803 FOR ASPHALT TRANSITIONS.

BENCHMARK DATA:

1. BM #100
   ARROW ON HYDRANT LOCATED ±45 FEET SOUTHEAST OF THE TENNIS COURT ON THE WEST SIDE OF JOHN C LODGE SERVICE DRIVE.
   N = 314539.40
   E = 13472385.47
   EL = 628.47' (NAVD88)
2. BM #101 (NOT PICTURED)
   ARROW ON HYDRANT LOCATED ±130' WEST OF THE NW BUIDLING OF THE ATHLETIC FACILITY.
   N = 314626.90
   E = 13471811.41
   EL = 629.44' (NAVD88)

LEGEND

- PR ASPHALT PLAYING COURT SURFACE (47,787 SF)
- PR ASPHALT WALK (1,200 SF)
- PR GRASS DRAINAGE CHANNEL (3,000 SF)
- PR FENCE
- PR SWING GATE

NORTH

GRAPHIC SCALE

20 0 10 20

(IN FEET)
1 inch = 20 ft.

OSPORTS
Ohio | Florida | Michigan | Tennessee
(216) 861-2020 www.osborn-eng.com

OSBORN ENGINEERING
Ohio | Florida | Michigan | Tennessee
(216) 861-2020 www.osborn-eng.com

MATTHAEI TENNIS COURT RENOVATION

WAYNE STATE UNIVERSITY

42 WEST WARREN AVENUE
DETROIT, MICHIGAN 44802
(313) 577-2424

STATE OF OHIO
SCOTT A. VURA
E-63375
REGISTERED PROFESSIONAL ENGINEER
03/22/23

TAG	ISSUED	DATE
A	ISSUED FOR BID	03/22/23

DRAWN BY	CRS
CHECKED BY	DRK
CLIENT PROJ NO.	080-353136
OSBORN PROJ NO.	J20221416.000

SITE PLAN

DRAWING NO.

C-101

P:\Wayne State University\J20221416.000_Tennis_Court_Reno\Drawings\Civil\Sheet Drawings\J20221416.000-C-101.dwg
3/20/2023 9:10 AM Stopp, Chase

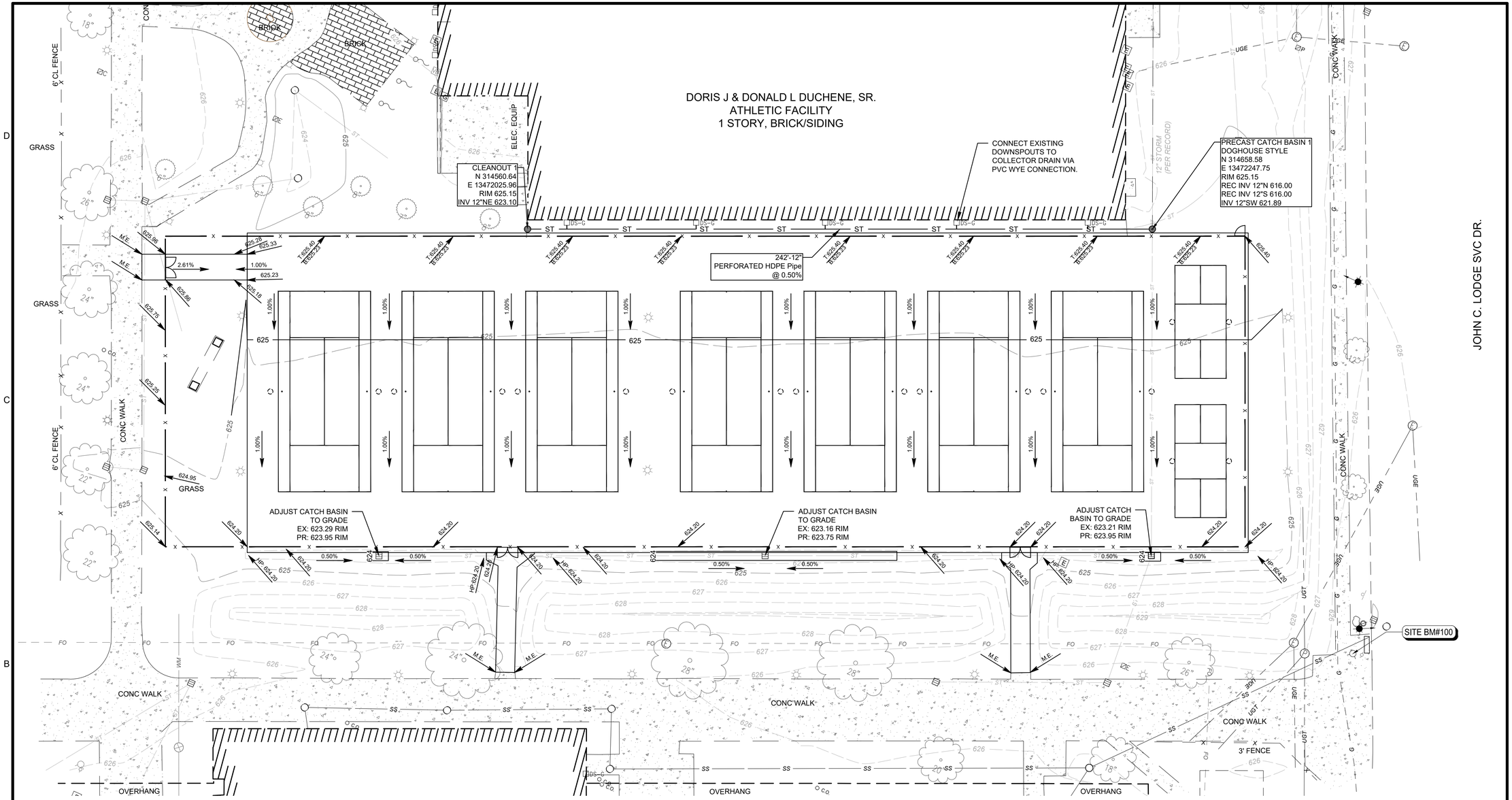

NOTES:

1. SEE SHEET C-803 FOR EXTENDED APRON SECTION FOR ASPHALT TRANSITION.
2. CONTRACTOR TO COORDINATE EXCESS SITE SPOILS GRADING WITH WAYNE STATE AND ENGINEER.
3. INVERTS LISTED AS "REC" ARE TAKEN FROM RECORD INFORMATION. EXACT INVERTS TO BE FIELD VERIFIED BEFORE MAKING DOGHOUSE CONNECTION. SEE DETAIL C-804.

LEGEND

PR SPOT ELEVATION	140.00
PR TOP AND BOTTOM COURT (SEE DETAIL)	T 140.00 B 139.00
PR SLOPE	0.50%
PR SITE CONTOUR	140
EX CONTOUR	140
PR SLOPE DIRECTION	
PR STORM PIPE	ST
PR NYOPLAST CLEAN OUT OR PRECAST CATCH BASIN	

NORTH

GRAPHIC SCALE

20 0 10 20

(IN FEET)
1 inch = 20 ft.

OSPORTS
Ohio | Florida | Michigan | Tennessee
(216) 861-2020 www.osborn-eng.com

OSBORN ENGINEERING
Ohio | Florida | Michigan | Tennessee
(216) 861-2020 www.osborn-eng.com

MATTHAEI TENNIS COURT RENOVATION

WAYNE STATE UNIVERSITY

42 WEST WARREN AVENUE
DETROIT, MICHIGAN 44802
(313) 577-2424

STATE OF OHIO
SCOTT A. VURA
E-63375
REGISTERED PROFESSIONAL ENGINEER
03/22/23

TAG	ISSUED	DATE
A	ISSUED FOR BID	03/22/23

DRAWN BY	CRS
CHECKED BY	DRK
CLIENT PROJ NO.	080-353136
OSBORN PROJ NO.	J20221416.000

UTILITY & GRADING PLAN

DRAWING NO.

C-102

P:\Wayne State University\J20221416.000_Tennis_Court_Reno\Drawings\Civil\Sheet Drawings\J20221416.000-C-102.dwg
3/21/2023 3:42 PM Stopp, Chase

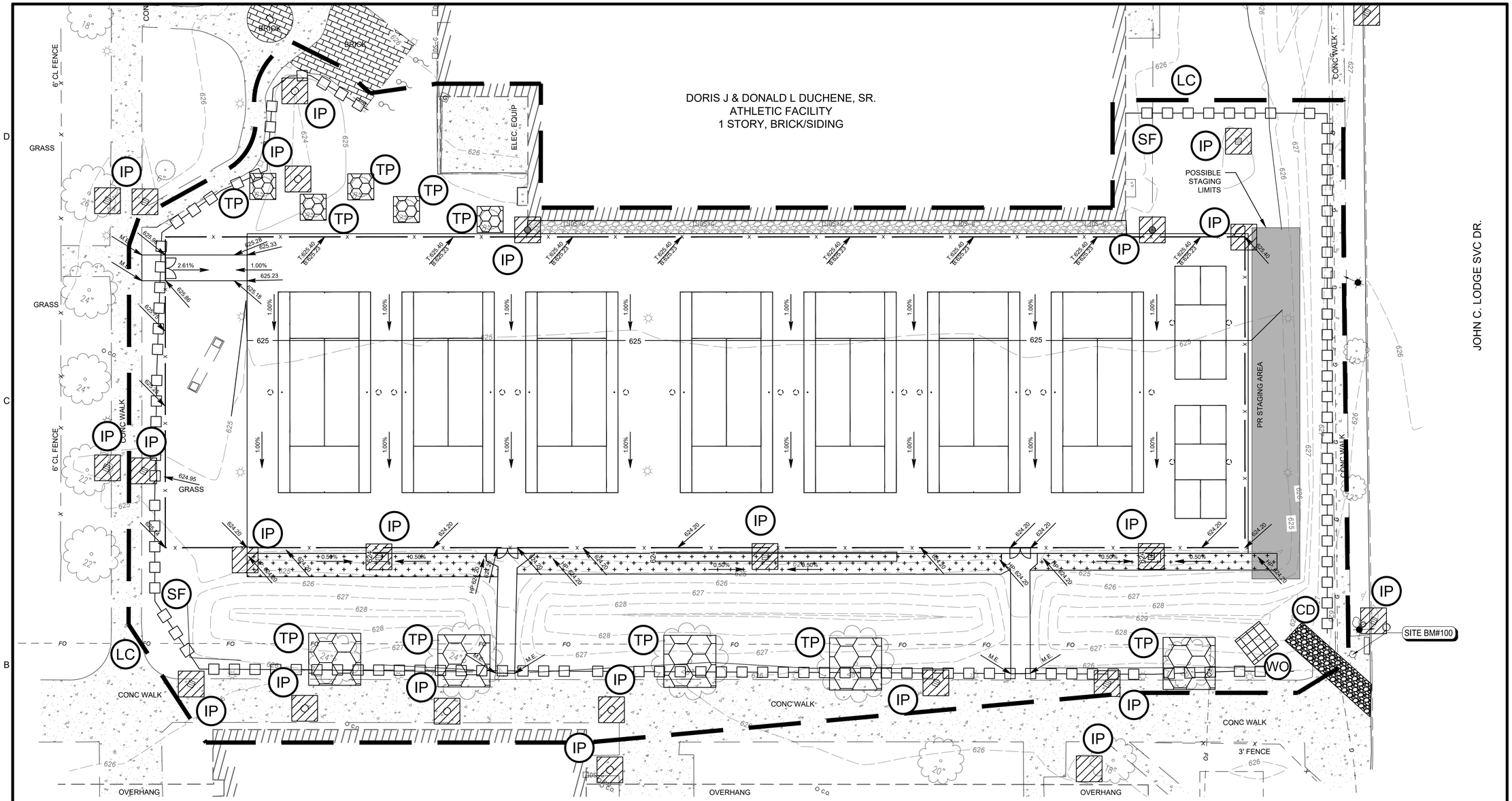

SWPPP NOTES:

SOIL TYPE: PROJECT AREA SOILS TYPE ARE CLASSIFIED AS URBAN LAND-RIVERFRONT COMPLEX, DENSE SUBSTRATUM, 0 TO 4 PERCENT SLOPES, UrbarB. THE HYDROLOGICAL SOIL GROUP CLASSIFICATION FROM NRCS WEBSOIL SURVEY DATABASE FOR UbarB IS D.

PROPOSED STAGING LIMITS FOR REFERENCE ONLY

CONSTRUCTION IMPLEMENTATION SCHEDULE:

1. MOBILIZATION
2. OWNER AND CONTRACTOR TO DOCUMENT EXISTING CONDITIONS WITH PHOTOGRAPHS AND NOTES AS A BASIS FOR RESTORATION
3. INSTALLATION FILTER SOCK, SILT FENCE, AND INLET PROTECTION
4. DEMOLITION OF EXISTING TENNIS COURT AND ASPHALT BASE
5. INSPECTION,AND REMEDYING OF EXISTING AGGREGATE BASE
6. INSTALL COLLECTOR DRAIN AND CATCH BASINS NEAR DUCHENE
7. INSTALL FENCE POST AND FENCING FABRIC
8. INSTALL SURFACE COURSE AND LEVELING COURSE OF ASPHALT
9. INSTALL ACRYLIC SURFACING
10. INSTALL TENNIS COURT EQUIPMENT AND COURT MARKINGS
11. DECOMPACTION OF ANY SITE SOILS DISTURBED BY CONSTRUCTION ACTIVITIES
12. RESTORE/REPAIR ACCESS ROADS, LAYDOWN AREAS, PAVEMENT, ETC. TO EXISTING CONDITION
13. RESEED NATURAL GRASS AREAS
14. DEMOBILIZATION
15. REMOVE EROSION CONTROL MEASURES
16. PROJECT COMPLETION

SWPPP LEGEND

SF	–	SILT FENCE/FILTER SOCK
IP	–	INLET PROTECTION
TP	–	TREE PROTECTION
WO	–	CONCRETE WASHOUT BASIN AND DUMPSTER AREAS
CD	–	CONSTRUCTION DRIVE
LC	–	LIMITS OF CONSTRUCTION

NORTH

GRAPHIC SCALE

20 0 10 20

(IN FEET)
1 inch = 20 ft.

OSPORTS
Ohio | Florida | Michigan | Tennessee
(216) 861-2020 www.osborn-eng.com

OSBORN ENGINEERING
Ohio | Florida | Michigan | Tennessee
(216) 861-2020 www.osborn-eng.com

MATTHAEI TENNIS COURT RENOVATION

WAYNE STATE UNIVERSITY

42 WEST WARREN AVENUE
DETROIT, MICHIGAN 44802
(313) 577-2424

STATE OF OHIO
SCOTT A. VURA
E-63375
REGISTERED PROFESSIONAL ENGINEER
03/22/23

TAG	ISSUED	DATE
A	ISSUED FOR BID	03/22/23

DRAWN BY	CRS
CHECKED BY	DRK
CLIENT PROJ NO.	080-353136
OSBORN PROJ NO.	J20221416.000

SWPPP PLAN

DRAWING NO.

C-401

P:\Wayne State University\J20221416.000_Tennis_Court_Reno\Drawings\Civil\Sheet Drawings\J20221416.000-C-401.dwg
3/21/2023 2:54 PM Donion, Chris

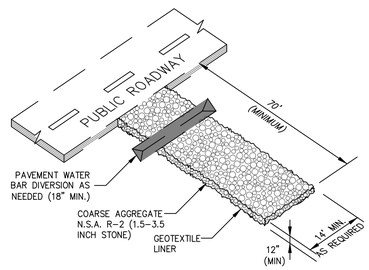

CONSTRUCTION DRIVE DETAIL

NOT TO SCALE

NOTES

1.) LOCATE STONE PAD AT ANY POINT WHERE VEHICULAR TRAFFIC WILL BE LEAVING THE SITE ONTO A PUBLIC RIGHT-OF-WAY STREET, ROADWAY, OR PARKING AREA.

2.) PAD WIDTH - 14'-0" MINIMUM BUT NOT LESS THAN FULL WIDTH OF ALL POINTS OF VEHICULAR EGRESS. PAD LENGTH - 70'-0" MINIMUM.

3.) MAINTAIN THE EXIT TO PREVENT TRACKING OR FLOW OF MUD ONTO PUBLIC RIGHT-OF-WAY. PROVIDE PERIODIC TOP DRESSING WITH 1.5-3.5" STONE, AS CONDITIONS DEMAND. IMMEDIATELY REMOVE ALL MATERIALS SPILLED, DROPPED, WASHED, OR TRACKED FROM VEHICLE OR SITE ONTO ROADWAY, INTO STORM DRAINS OR DITCHES.

4.) CLEAN WHEELS TO REMOVE MUD PRIOR TO EXITING CONSTRUCTION SITE. WHEN WASHING IS REQUIRED, DO SO ON AREAS STABILIZED WITH CRUSHED STONE DRAINING INTO AN APPROVED SEDIMENT TRAP OR SEDIMENT BASIN.

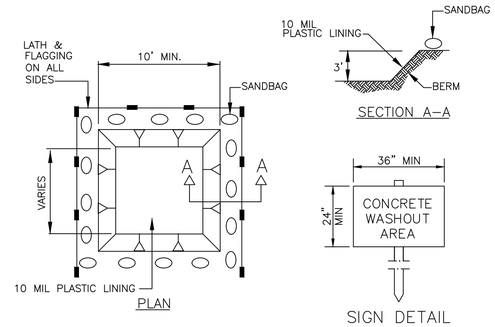

1. A CONCRETE WASHOUT AREASHALL BE DESIGNATED TO CLEAN CONCRETE TRUCKS AND TOOLS. AT NO TIME SHALL CONCRETE PRODUCTS BE ALLOWED TO ENTER STREAMS OR DRAINS.
2. TEMPORARY CONCRETE WASHOUT FACILITIES (TYPE BELOW GRADE) SHOULD BE CONSTRUCTED AS SHOWN ON THE DETAIL, WITH A RECOMMEND MINIMUM LENGTH AND MINIMUM WIDTH OF 10 FT. THE QUANTITY AND VOLUME SHOULD BE SUFFICIENT TO CONTAIN ALL LIQUID AND CONCRETE WASTE. GENERATED BY WASHOUT OPERATIONS.
3. LATH AND FLAGGING SHOULD BE COMMERCIAL TYPE.
4. PLASTIC LINING MATERIAL SHOULD BE A MINIMUM 10 MIL POLYETHYLENE SHEETING AND SHOULD BE FREE OF HOLES, TEARS, OR THERE DEFECTS THAT COMPROMISE THE IMPERMEABILITY OF THE MATERIAL BELOW GRADE.

ALTERNATE: APPROVED FABRIC WASHOUT BAGS.

CONCRETE WASHOUT FACILITY

NOT TO SCALE

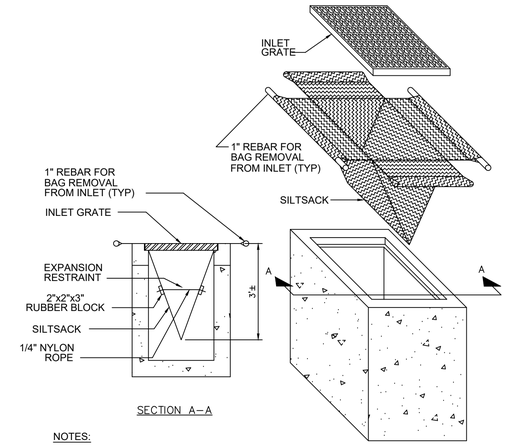

NOTES:

1. EXACT DIMENSIONS TO BE DETERMINED IN FIELD BASED ON ACTUAL INLET DIMENSIONS. SILTSACK BY ATLANTIC CONSTRUCTION FABRICS, INC. OR APPROVED EQUAL.
2. SEDIMENT MUST BE REMOVED AFTER EACH STORM EVENT.

SILT SACK INLET PROTECTION DETAIL

NOT TO SCALE

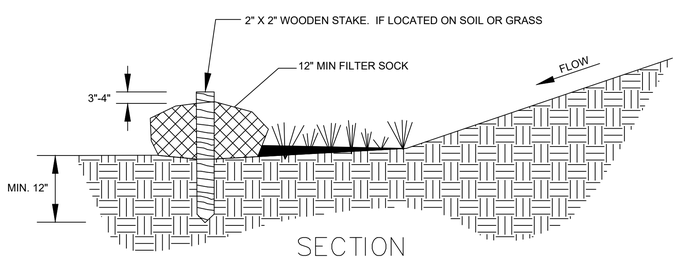

1. MATERIALS - COMPOST USED FOR FILTER SOCKS SHALL BE WEED, PATHOGEN AND INSECT FREE AND FREE OF ANY REFUSE, CONTAMINANTS OR OTHER MATERIALS TOXIC TO PLANT GROWTH. THEY SHALL BE DERIVED FROM A WELL-COMPOSED SOURCE OF ORGANIC MATTER AND CONSIST OF A PARTICLE RANGING FROM 3/8" TO 2".
2. FILTER SOCKS SHALL BE 3 OR 5 MIL CONTINUOUS, TUBULAR, HDPE 3/8" KNITTED MESH NETTING MATERIAL, FILLED WITH COMPOST PASSING THE ABOVE SPECIFICATIONS FOR COMPOST PRODUCTS.

INSTALLATION:

3. FILTER SOCKS WILL BE PLACED ON A LEVEL LINE ACROSS SLOPES, GENERALLY PARALLEL TO THE BASE OF THE SLOPE OR OTHER AFFECTED AREA. ON SLOPES APPROACHING 2:1, ADDITIONAL SOCKS SHALL BE PROVIDED AT THE TOP AND AS NEEDED MID-SLOPE.
4. FILTER SOCKS INTENDED TO BE LEFT AS A PERMANENT FILTER OR PART OF THE NATURAL LANDSCAPE, SHALL BE SEEDED AT THE TIME OF INSTALLATION FOR ESTABLISHMENT OF PERMANENT VEGETATION.
5. FILTER SOCKS ARE NOT TO BE USED IN CONCENTRATED FLOW SITUATIONS OR IN RUNOFF CHANNELS.

MAINTENANCE:

6. ROUTINELY INSPECT FILTER SOCKS AFTER EACH SIGNIFICANT RAIN, MAINTAINING FILTER SOCKS IN A FUNCTIONAL CONDITION AT ALL TIMES.
7. REMOVE SEDIMENTS COLLECTED AT THE BASE OF THE FILTER SOCKS WHEN THEY REACH 1/3 OF THE EXPOSED HEIGHT OFF THE PRACTICE.
8. WHERE THE FILTER SOCK DETERIORATES OR FAILS, IT WILL BE REPAIRED OR REPLACED WITH A MORE EFFECTIVE ALTERNATIVE.
9. REMOVAL - FILTER SOCKS WILL BE DISPERSED ON SITE WHEN NO LONGER REQUIRED IN SUCH A WAY AS TO FACILITATE AND NOT OBSTRUCT SEEDINGS.

FILTER SOCK DETAIL

NOT TO SCALE

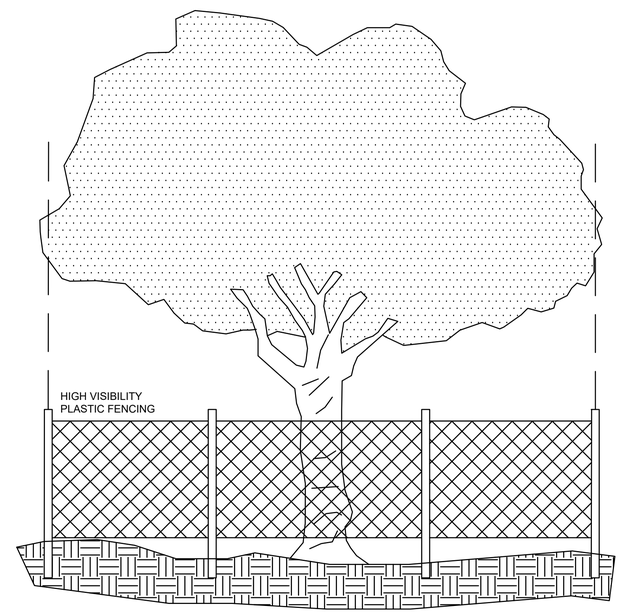

PROTECTIVE FENCING:
ORANGE VINYL CONSTRUCTION FENCING CHAIN LINK FENCING, SNOW FENCING OR OTHER SIMILAR FENCING AT LEAST FOUR FEET (4') HIGH AND SUPPORTED AT A MAXIMUM OF TEN-FOOT (10') INTERVALS B APPROVED METHODS SUFFICIENT ENOUGH TO KEEP THE FENCE UPRIGHT AND IN PLACE. THE FENCING SHALL BE OF A HIGHLY VISIBLE MATERIAL.

PRIOR TO CONSTRUCTION:
THE CONTRACTOR OR SUBCONTRACTOR SHALL CONSTRUCT AND MAINTAIN, FOR EACH PROTECTED TREE OR GROUP OF TREES ON THE SITE, A PROTECTIVE FENCING WHICH ENCIRCLES THE OUTER LIMITS OF THE CRITICAL ROOT ZONE OF THE TREES TO PROTECT THEM FROM CONSTRUCTION ACTIVITY. ALL PROTECTIVE FENCING SHALL BE IN PLACE PRIOR TO THE COMMENCEMENT OF ANY SITE WORK AND REMAIN UN PLACE UNTIL AFTER ALL EXTERIOR WORK HAS BEEN COMPLETED.

TYPICAL TREE PROTECTION FENCING

NOT TO SCALE

OSPORTS
Ohio | Florida | Michigan | Tennessee
(216) 861-2020 www.osborn-eng.com

OSBORN ENGINEERING
Ohio | Florida | Michigan | Tennessee
(216) 861-2020 www.osborn-eng.com

MATTHAEI TENNIS COURT RENOVATION

WAYNE STATE UNIVERSITY

42 WEST WARREN AVENUE
DETROIT, MICHIGAN 44802
(313) 577-2424

STATE OF OHIO
SCOTT A. VURA
E-63375
REGISTERED PROFESSIONAL ENGINEER
03/22/23

TAG	ISSUED	DATE
A	ISSUED FOR BID	03/22/23

DRAWN BY	CRS
CHECKED BY	DRK
CLIENT PROJ NO.	080-353136
OSBORN PROJ NO.	J20221416.000

SWPPP DETAILS

DRAWING NO.

C-402

P:\Wayne State University\J20221416.000_Tennis_Court_Reno\Drawings\Civil\Sheet Drawings\J20221416.000-C-402.dwg
3/21/2023 2:55 PM Donion, Chris

NOTES:
1. ALL COURT MARKINGS SHALL BE 2" THICK.
2. CENTER MARK TO BE 2" THICK AND 4" LONG.
2. ALL OVERALL DIMENSIONS ARE SHOWN OUTSIDE OF LINE TO OUTSIDE OF LINE.
3. THE PLAYING COURT SHALL BE BLUE IN COLOR WITH WHITE LINES.
4. SEE SHEET C-100 FOR COURT LAYOUTS.

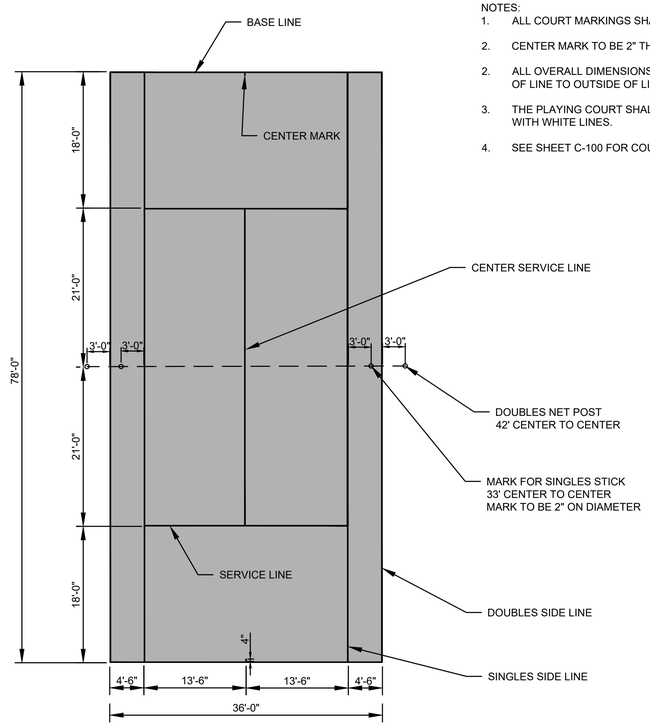

1 78' TENNIS COURT PLAYING LINE LAYOUT

SCALE: 1"=10'

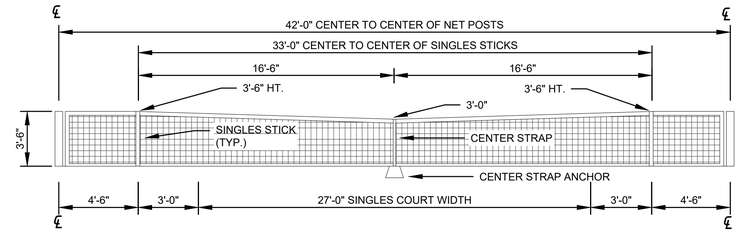

2 DOUBLES NET W/ SINGLES STICKS

NOT TO SCALE

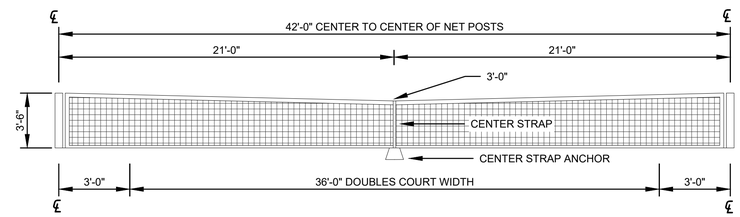

3 DOUBLES NET

NOT TO SCALE

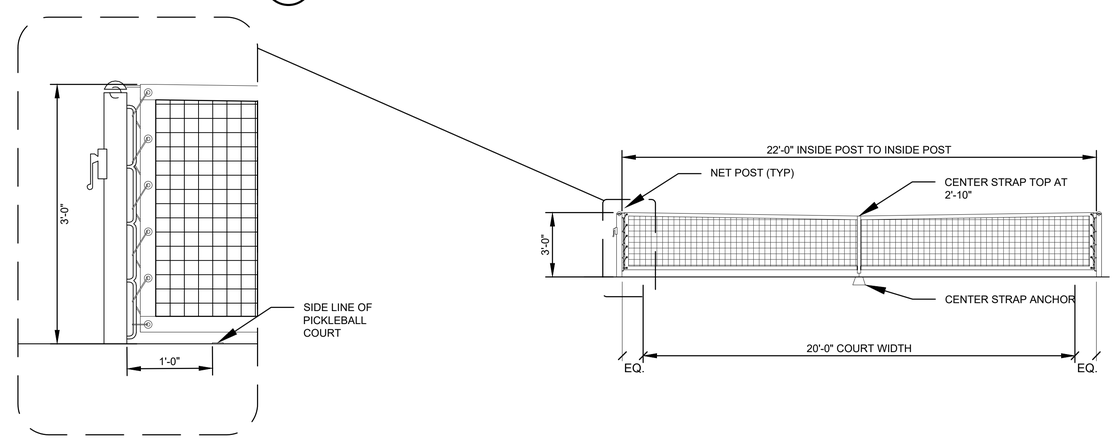

5 PICKLEBALL NET

NOT TO SCALE

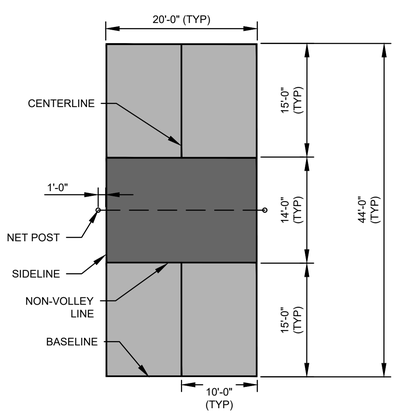

NOTES:
1. ALL COURT MARKINGS SHALL BE 2" THICK.
2. ALL DIMENSIONS ARE SHOWN OUTSIDE OF LINE TO OUTSIDE OF LINE.
3. THE PLAYING COURT SHALL BE BLUE IN COLOR WITH WHITE LINES. THE NON-VOLLEY ZONE SHALL BE RED.
4. SEE SHEET C-100 FOR COURT LAYOUTS.

4 PICKLEBALL COURT PLAYING LINE LAYOUT

SCALE: 1"=10'

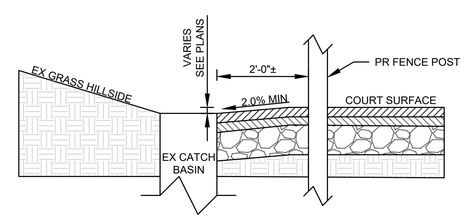

NOTE:
DETAIL IS FOR GRADING/COURT TRANSITION INTENT ACROSS SOUTHEAST SIDE ONLY.
SEE DETAILS FOR TYPICAL COURT TRANSITION, TYPICAL COURT SECTION AND FENCING DETAILS.

6 COURT TO DRAINAGE CHANNEL TRANSITION

NOT TO SCALE

OSPORTS
Ohio | Florida | Michigan | Tennessee
(216) 861-2020 www.osborn-eng.com

OSBORN ENGINEERING
Ohio | Florida | Michigan | Tennessee
(216) 861-2020 www.osborn-eng.com

MATTHAEI TENNIS COURT RENOVATION

WAYNE STATE UNIVERSITY

42 WEST WARREN AVENUE
DETROIT, MICHIGAN 44802
(313) 577-2424

STATE OF OHIO
SCOTT A. VURA
E-63375
REGISTERED PROFESSIONAL ENGINEER
03/22/23

TAG	ISSUED	DATE
A	ISSUED FOR BID	03/22/23

DRAWN BY	CRS
CHECKED BY	DRK
CLIENT PROJ NO.	080-353136
OSBORN PROJ NO.	J20221416.000

COURT DETAILS

DRAWING NO.

C-801

P:\Wayne State University\J20221416.000_Tennis_Court_Reno\Drawings\Civil\Sheet Drawings\J20221416.000-C-801.dwg
3/21/2023 2:55 PM Donlon, Chris

NOTES:
1. PROVIDE SHOP DRAWINGS.
2. ALL FENCE COMPONENTS TO BE BLACK, VINYL COATED.
3. STEEL RODS (DROP BAR) MUST BE ABLE TO BE FASTENED IN UP OR DOWN POSITION. IT SHOULD NOT BE POSSIBLE TO COMPLETELY REMOVE DROP BAR.

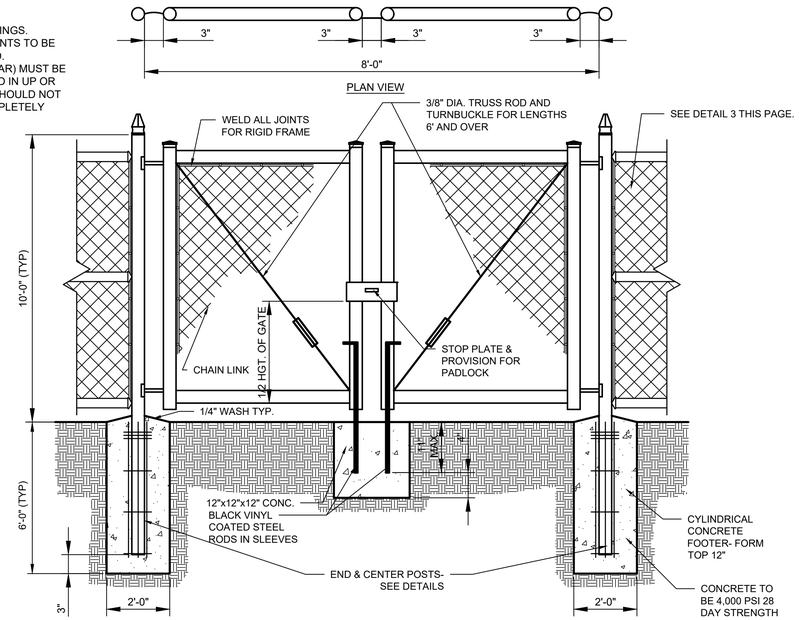

1 DOUBLE LEAF GATE DETAIL

NOTES:
1. PROVIDE SHOP DRAWINGS FOR ALL FENCES.
2. ALL FENCE COMPONENTS TO BE BLACK, VINYL COATED.
3. NO GATE SHALL OPEN ONTO THE FIELD. THEY MUST OPEN AWAY FROM THE FIELD.

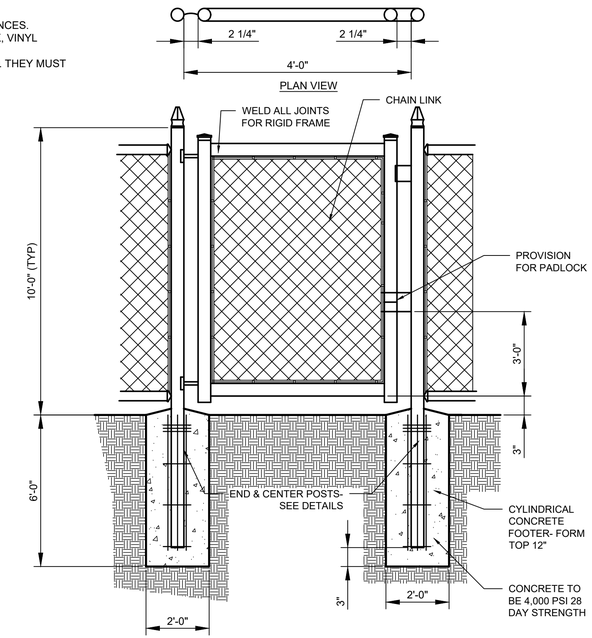

2 SINGLE LEAF GATE DETAIL

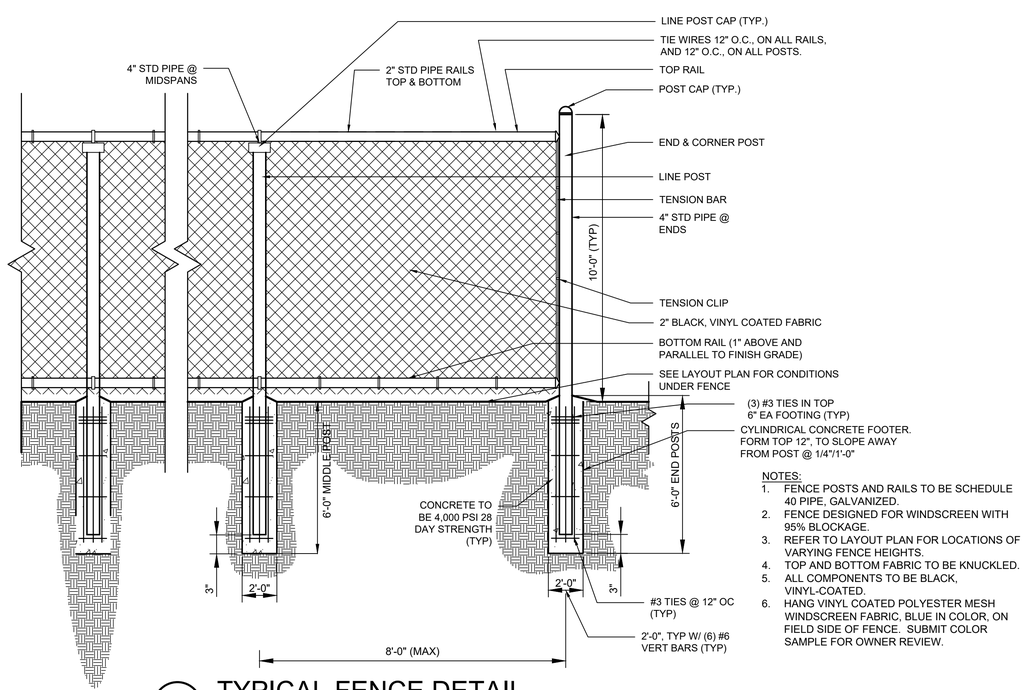

NOTES:
1. FENCE POSTS AND RAILS TO BE SCHEDULE 40 PIPE, GALVANIZED.
2. FENCE DESIGNED FOR WINDSCREEN WITH 95% BLOCKAGE.
3. REFER TO LAYOUT PLAN FOR LOCATIONS OF VARYING FENCE HEIGHTS.
4. TOP AND BOTTOM FABRIC TO BE KNUCKLED.
5. ALL COMPONENTS TO BE BLACK, VINYL-COATED.
6. HANG VINYL COATED POLYESTER MESH WINDSCREEN FABRIC, BLUE IN COLOR, ON FIELD SIDE OF FENCE. SUBMIT COLOR SAMPLE FOR OWNER REVIEW.

3 TYPICAL FENCE DETAIL

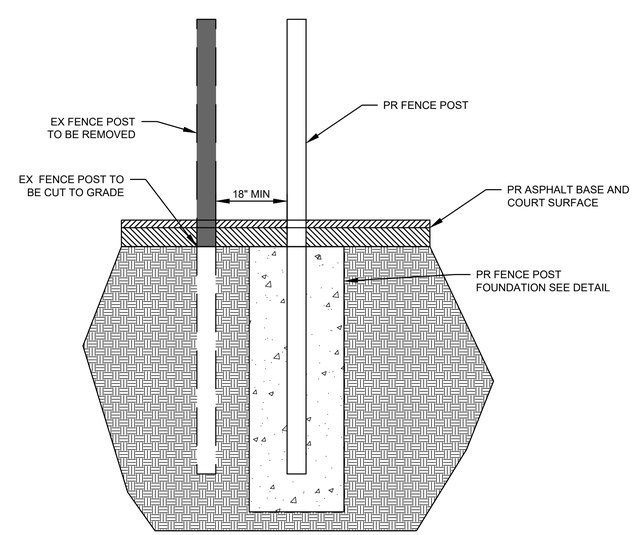

4 FENCE DEMOLITION DETAIL AND PR FENCE PLACEMENT

OSPORTS
Ohio | Florida | Michigan | Tennessee
(216) 861-2020 www.osborn-eng.com

OSBORN ENGINEERING
Ohio | Florida | Michigan | Tennessee
(216) 861-2020 www.osborn-eng.com

MATTHAEI TENNIS COURT RENOVATION

WAYNE STATE UNIVERSITY

42 WEST WARREN AVENUE
DETROIT, MICHIGAN 44802
(313) 577-2424

STATE OF OHIO
SCOTT A. VURA
E-63375
REGISTERED PROFESSIONAL ENGINEER
03/22/23

TAG	ISSUED	DATE
A	ISSUED FOR BID	03/22/23

DRAWN BY	CRS
CHECKED BY	DRK
CLIENT PROJ NO.	080-353136
OSBORN PROJ NO.	J20221416.000

FENCE DETAILS

DRAWING NO.
C-802

P:\Wayne State University\J20221416.000_Tennis_Court_Reno\Drawings\Civil\Sheet Drawings\J20221416.000-C-802.dwg
3/21/2023 2:56 PM Donlon, Chris

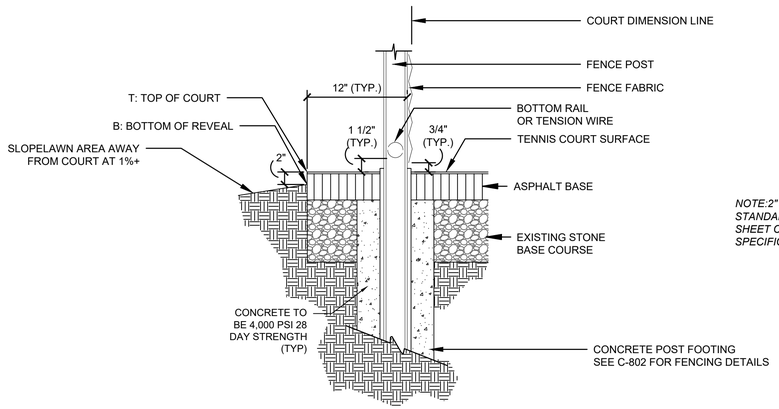

NOTE:2" ASPHALT REVEAL IS THE STANDARD CONFIGURATION. SEE SHEET C-102 FOR GRADING SPECIFICS

1 EXTENDED APRON SECTION AT ASPHALT COURT EDGE

NOT TO SCALE

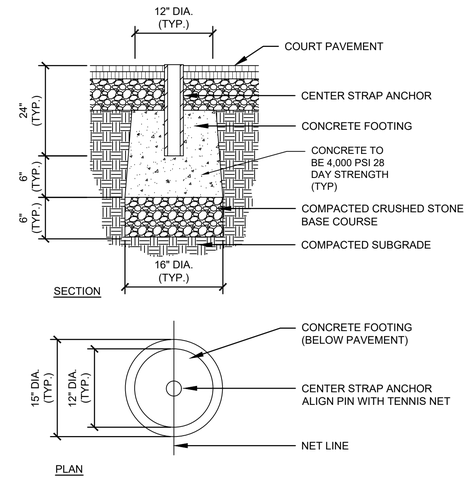

2 TENNIS NET CENTER STRAP ANCHOR

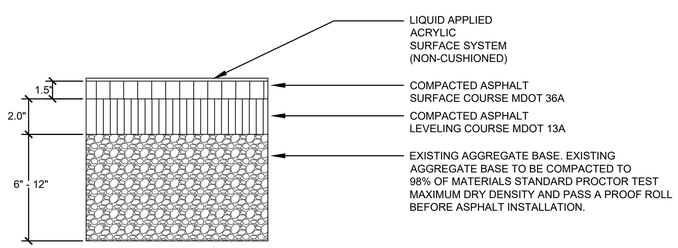

3 ASPHALT COURSE FOR FREEZE/THAW CLIMATE

NOT TO SCALE

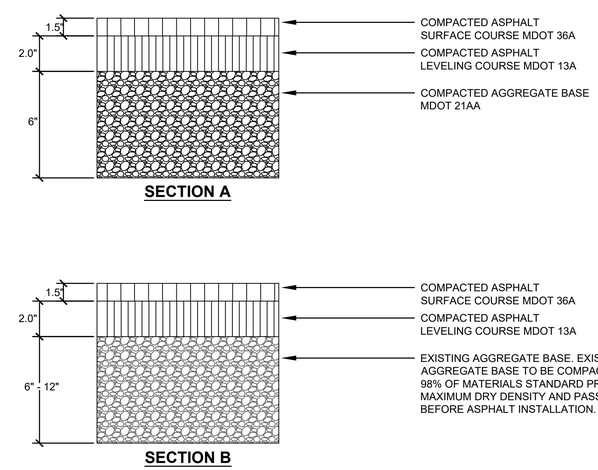

NOTE: NORTHWEST ASPHALT PATH REQUIRES FULL DEPTH PAVEMENT SECTION A. ASPHALT PATHS ALONG SOUTHERN FENCE LINE TO BE MILLED TO EXISTING AGGREGATE BASE, AGGREGATE BAS IS RE-COMPACTED AND NEW ASPHALT OVERLAYED AS SHOWN IN SECTION B.

4 ASPHALT SECTION - WALKWAYS

NOT TO SCALE

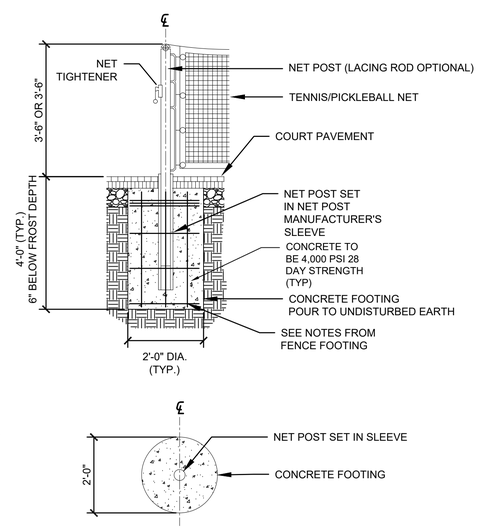

5 TYPICAL NET POST FOOTING - CYLINDER SHAPE

OSPORTS
Ohio | Florida | Michigan | Tennessee
(216) 861-2020 www.osborn-eng.com

OSBORN ENGINEERING
Ohio | Florida | Michigan | Tennessee
(216) 861-2020 www.osborn-eng.com

MATTHAEI TENNIS COURT RENOVATION

WAYNE STATE UNIVERSITY

42 WEST WARREN AVENUE
DETROIT, MICHIGAN 44802
(313) 577-2424

STATE OF OHIO
SCOTT A. VURA
E-63375
REGISTERED PROFESSIONAL ENGINEER
03/22/23

TAG	ISSUED	DATE
A	ISSUED FOR BID	03/22/23

DRAWN BY	CRS
CHECKED BY	DRK
CLIENT PROJ NO.	080-353136
OSBORN PROJ NO.	J20221416.000

CIVIL DETAILS

DRAWING NO.

C-803

P:\Wayne State University\J20221416.000_Tennis_Court_Reno\Drawings\Civil\Sheet Drawings\J20221416.000-C-803.dwg
3/21/2023 2:56 PM Donion, Chris

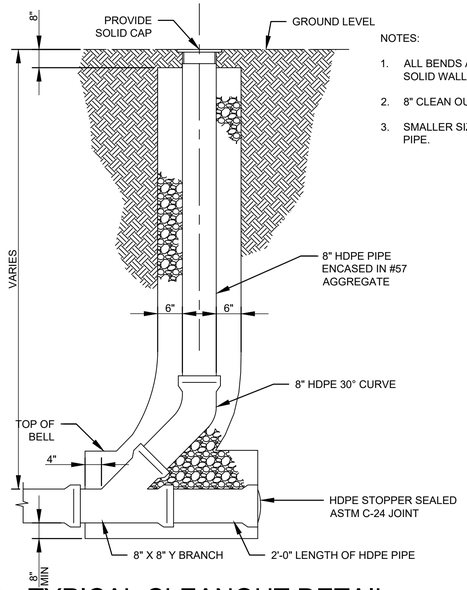

NOTES:

1. ALL BENDS AND FITTINGS AND ALL VERTICAL PIPE SHALL BE SOLID WALL HDPE.
2. 8" CLEAN OUT SHALL BE USED FOR 8" SEWER AND LARGER.
3. SMALLER SIZE SEWERS AND LAMP SHALL HAVE SAME SIZE PIPE.

1 TYPICAL CLEANOUT DETAIL

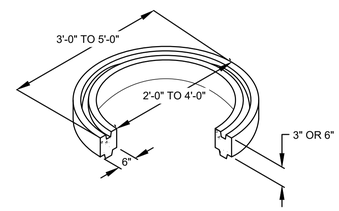

NOTES:

1. CONTRACTOR TO VERIFY EXACT GRADE RING SIZE IN THE FIELD
2. SEE SHEET C-102 FOR RIM ADJUSTMENT.

2 PRE-CAST GRADE RING

NOT TO SCALE

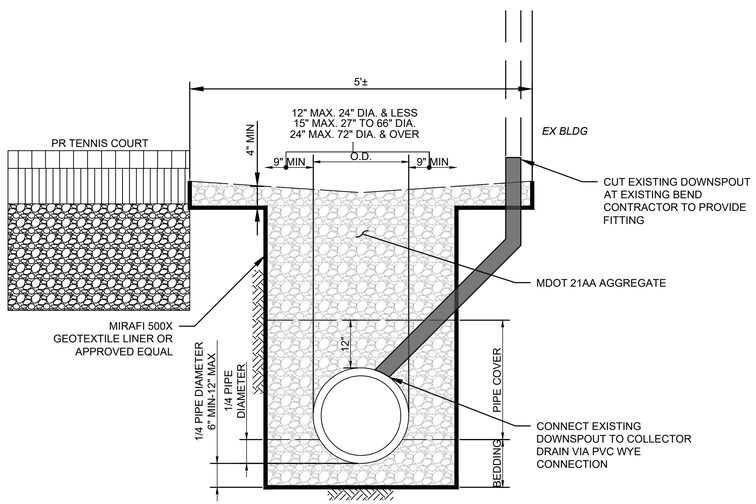

3 FRENCH DRAIN DETAIL

NOT TO SCALE

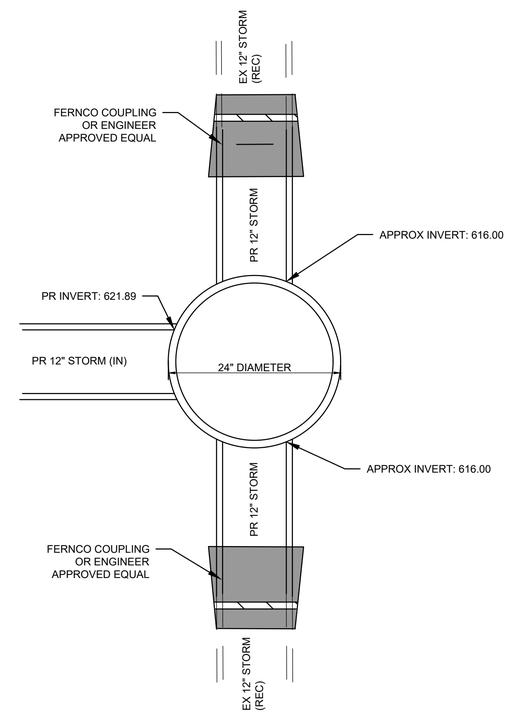

4 FLEXIBLE COUPLING DETAIL (CATCH BASIN #2)

NOT TO SCALE

OSPORTS
Ohio | Florida | Michigan | Tennessee
(216) 861-2020 www.osborn-eng.com

OSBORN ENGINEERING
Ohio | Florida | Michigan | Tennessee
(216) 861-2020 www.osborn-eng.com

MATTHAEI TENNIS COURT RENOVATION

WAYNE STATE UNIVERSITY

42 WEST WARREN AVENUE
DETROIT, MICHIGAN 44802
(313) 577-2424

STATE OF OHIO
SCOTT A. VURA
E-63375
REGISTERED PROFESSIONAL ENGINEER
03/22/23

TAG	ISSUED	DATE
A	ISSUED FOR BID	03/22/23

DRAWN BY	CRS
CHECKED BY	DRK
CLIENT PROJ NO.	080-353136
OSBORN PROJ NO.	J20221416.000

CIVIL DETAILS

DRAWING NO.

C-804

P:\Wayne State University\J20221416.000_Tennis_Court_Reno\Drawings\Civil\Sheet Drawings\J20221416.000-C-804.dwg
3/21/2023 2:57 PM Denton, Chris

DOG HOUSE OPENING SIZES	
SEWER SIZE	MAX OPENING
8" - 10"	17.5"
12" - 15"	20"
18" - 24"	30"

FOR OTHER DETAILS OF MANHOLE, SEE STANDARD MANHOLE DETAIL 330561-02

MANHOLE SIZING	
SEWER PIPE SIZE	MANHOLE DIAMETER
24"	4'-0"
30"	5'-0"
42"	6'-0"

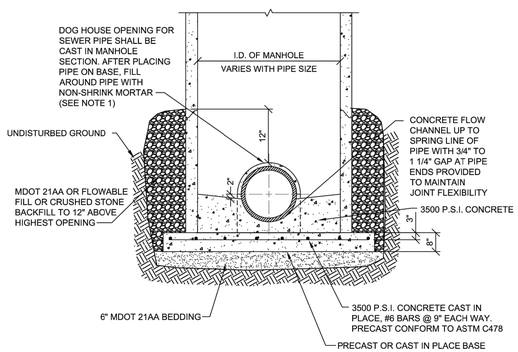

NOTE:

1. DOG HOUSE MAY BE USED OVER EXISTING SEWER PIPE. NEW PIPE OPENINGS SHALL BE MANUFACTURED WITH KOR-N-SEAL BOOT AND STAINLESS STEEL KORBAND FLEXIBLE RUBBER JOINTS OR APPROVED EQUAL.

REV	DESCRIPTION	DATE
-	-	-
1	UPDATED	06/2020

REVISIONS

MANHOLE, OVER EXISTING SEWER

CITY OF DETROIT
WATER AND SEWERAGE DEPARTMENT
ENGINEERING DIVISION

SCALE NONE | SHEET 1 OF 1
DATE 9/2018 | DWG. No. 330561-08

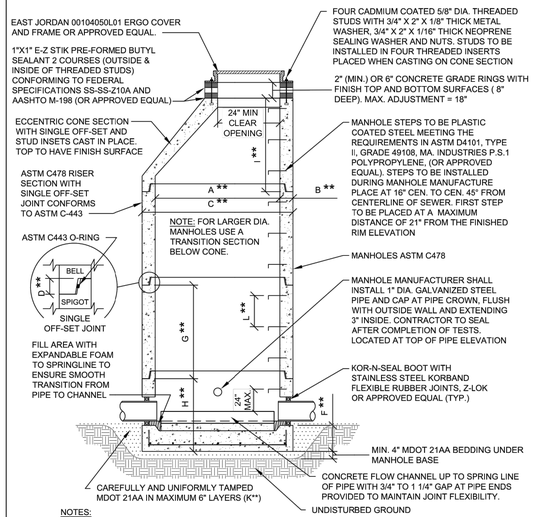

NOTES:

1. REFER TO DETAIL SHEET 330561-05 FOR MANHOLE ASSEMBLY TABLE **.

2. PRECAST CONCRETE MANHOLE SECTIONS SHALL CONFORM TO ALL THE REQUIREMENTS OF "SPECIFICATIONS FOR PRECAST REINFORCED CONCRETE MANHOLE RISERS AND TOPS" ASTM C-478 WITH SINGLE OFF-SET JOINT CONFORMS TO ASTM C-443.

3. EACH SECTION SHALL HAVE NOT MORE THAN TWO HOLES FOR HANDLING PURPOSES. THESE HOLES SHALL BE SATISFACTORILY PLUGGED WITH GROUT AFTER INSTALLATION.

REV	DESCRIPTION	DATE
1	UPDATED	06/2020

REVISIONS

STANDARD MANHOLE PRECAST

CITY OF DETROIT
WATER AND SEWERAGE DEPARTMENT
ENGINEERING DIVISION

SCALE NONE | SHEET 1 OF 1
DATE 09/2018 | DWG. No. 330561-02

A	RISER DIAMETER	IN	48	60	72	84	96	108	120
B	WALL THICKNESS	IN	5	6	7	8	9	9	10
C	OUTSIDE DIAMETER	IN	58	72	86	100	114	126	140
D	JOINT DEPTH	IN	4.25	4.75	5.0	5.0	5.0	5.0	6.0
E	-	-	-	-	-	-	-	-	-
F	INTEGRAL BASE	IN	8	8	8	8	8	8	8
G	RISER HEIGHTS	FT	1.33	1.42	1.42	1.42	2.0	2.0	2.0
		FT	2.67	2.60	3.00	2.00	2.00	2.00	2.00
		FT	4	4	4	4	4	4	4
		FT	5.33	6.0	6.0	6.0	6.0	6.0	6.0
		FT	6	8	8	8	8	8	8
H	BASE HEIGHT RISER HEIGHTS CAN ALSO BE USED AS BASE SECTIONS	FT	1.33	1.42	1.42	1.42	2.0	2.0	2.0
		FT	2.67	2.60	3.00	2.00	2.00	2.00	2.00
		FT	4	4	4	4	4	4	4
		FT	5.33	6.0	6.0	6.0	6.0	6.0	6.0
		FT	6	8	8	8	8	8	8
I	CONE HEIGHT TO 24"	FT	1	*	*	*	*	*	*
		FT	2	*	*	*	*	*	*
		FT	3	*	*	*	*	*	*
		FT	4	*	*	*	*	*	*
	(REDUCING CONE HEIGHT TO 48")	FT	5	2.67	2.67	*	*	*	*
	CONE HEIGHT TO 48"	FT	5	*	*	*	*	*	*
K	LOOSE BASE - OUTSIDE DIA. 6" THK.	IN	72	*	*	*	*	*	*
	8" THK.	IN	72	84	96	*	*	*	*
	12" THK.	IN	*	84	96	108	120	132	156
L	STEP SPACING	IN	16	16	16	16	16	16	16
	APPROX. WEIGHT / FT.	LB	867	1295	1811	2409	3090	3865	4200

* N/A NOT AVAILABLE

NOTES:

1. SOME DIMENSIONS MAY VARY BY MANUFACTURER. DESIGN ENGINEER SHALL ENSURE DETAIL MEETS DWSD REQUIREMENTS.
2. SEE DETAIL SHEET 330561-02 FOR STANDARD MANHOLE PRECAST DESIGN.

MANHOLES ASTM C-478

WEIGHTS AND DIMENSIONS - US CUSTOMARY

REV	DESCRIPTION	DATE
1	UPDATED	06/2020

REVISIONS

MANHOLE, ASSEMBLY

CITY OF DETROIT
WATER AND SEWERAGE DEPARTMENT
ENGINEERING DIVISION

SCALE NONE | SHEET 1 OF 1
DATE 09/2018 | DWG. No. 330561-05

OSPORTS
Ohio | Florida | Michigan | Tennessee
(216) 861-2020 www.osborn-eng.com

OSBORN ENGINEERING
Ohio | Florida | Michigan | Tennessee
(216) 861-2020 www.osborn-eng.com

MATTHAEI TENNIS COURT RENOVATION

WAYNE STATE UNIVERSITY

42 WEST WARREN AVENUE
DETROIT, MICHIGAN 44802
(313) 577-2424

STATE OF OHIO
SCOTT A. VURA
E-63375
REGISTERED PROFESSIONAL ENGINEER
03/22/23

TAG	ISSUED	DATE
A	ISSUED FOR BID	03/22/23

DRAWN BY CRS
CHECKED BY DRK
CLIENT PROJ NO. 080-353136
OSBORN PROJ NO. J20221416.000

CIVIL DETAILS

DRAWING NO.

C-805

P:\Wayne State University\J20221416.000_Tennis_Court_Reno\Drawings\Civil\Sheet Drawings\J20221416.000-C-805.dwg
3/21/2023 2:57 PM Donlon, Chris

PROJECT MANUAL

WAYNE STATE UNIVERSITY MATTHAEI TENNIS COURT RENOVATIONS

PROJECT # 080-353136

ISSUED FOR BID MARCH 22, 2023

Prepared For: **WAYNE STATE UNIVERSITY**

Prepared By: **OSPORTS - Division of Osborn Engineering**
1111 Superior Avenue, Suite 2100
Cleveland, OH 44114

TABLE OF CONTENTS

SECTION 01 10 00

SUMMARY

PART 1 - GENERAL

1.1 RELATED DOCUMENTS

A. Drawings and general provisions of the Contract, including General and Supplementary Conditions and other Division 01 Specification Sections, apply to this Section.

1.2 SUMMARY

A. Section Includes:

1. Project information.
2. Work covered by Contract Documents.
3. Access to site.
4. Work restrictions.
5. Specification and drawing conventions.

1.3 PROJECT INFORMATION

A. Project Identification: Wayne State University Matthaei Tennis Court Renovations

1. Project Location: 5401 John C. Lodge Service Drive, Detroit MI, 48208

B. Owner: Wayne State University

1. Owner's Representatives:

Ranjani Nainala, Construction - Project Manager
Wayne State University, Design and Construction Services

Jason Clark, Executive Associate Athletics Director
Wayne State University

Erika Wallace, Interim Director of Athletics, Athletics Wayne State University

C. Architect/Engineer: OSPORTS

1. Points of Contact

Chase Stopp – Civil Engineer, Project Manager

Osborn Engineering dba OSPORTS

1.4 WORK COVERED BY CONTRACT DOCUMENTS

A. The Work of Project is defined by the Contract Documents and consists of the following:

Items below do not necessarily comprise a fully comprehensive task list. See design plans for full scope of project.

1. Contractor mobilization.

2. Perform preconstruction video prior to construction of all areas occupied by the contractor and trucking areas.

3. Install erosion and sediment control as per plans.

4. Demolition of existing playing court down to aggregate base.

5. Removal and/or relocation of excess soils.

6. Installation of storm infrastructure.

7. Inspection and remedying of existing aggregate base.

8. Installation of perimeter fencing.

9. Installation of court asphalt layers.

10. Installation of playing field system and all court striping.

11. Decompaction of any site soils disturbed by construction activities.

12. Restoration and repair of any areas disturbed by construction activities and laydown areas.

13. Reseed and resod of natural grass areas.

14. Contractor demobilization.

15. Removal of filter sock, silt fence and inlet protection.

16. Project completion.

B. Type of Contract:

1. Project will be constructed under a single prime contract.

1.5 ACCESS TO SITE

A. General: Contractor shall have full use of Project site for construction operations during construction period. Contractor's use of Project site is limited only by Owner's right to perform work or to retain other contractors on portions of Project.

B. Use of Site: Limit use of Project site to areas within the Contract limits indicated. Do not disturb portions of Project site beyond areas in which the Work is indicated.

1. Driveways, Walkways and Entrances: Keep driveways and entrances serving premises clear and available to Owner, Owner's employees, and emergency vehicles at all times. Do not use these areas for parking or storage of materials.

a. Schedule deliveries to minimize use of driveways and entrances by construction operations.
b. Schedule deliveries to minimize space and time requirements for storage of materials and equipment on-site.

1.6 WORK RESTRICTIONS

A. Work Restrictions, General: Comply with restrictions on construction operations.

1. Comply with limitations on use of public streets and with other requirements of authorities having jurisdiction.

B. On-Site Work Hours: Limit work in the existing field to normal business working hours of 8:00 a.m. to 6:00p.m., Monday through Saturday, unless otherwise indicated.

C. Existing Utility Interruptions: Do not interrupt utilities serving facilities occupied by Owner or others unless permitted under the following conditions and then only after providing temporary utility services according to requirements indicated:

1. Notify Owner not less than two days in advance of proposed utility interruptions.
2. Obtain Owner's written permission before proceeding with utility interruptions.

D. Nonsmoking Site: Smoking is not permitted on the site.

E. Controlled Substances: Use of tobacco products and other controlled substances on Project site is not permitted.

1.7 PROJECT SCHEDULE

A. Anticipated Construction Start: June 5th, 2023

B. Punchlist/Substantial Completion: August 11th, 2023

C. Project Closeout: August 25th, 2023

1.8 SPECIFICATION AND DRAWING CONVENTIONS

A. Specification Content: The Specifications use certain conventions for the style of language and the intended meaning of certain terms, words, and phrases when used in particular situations. These conventions are as follows:

1. Imperative mood and streamlined language are generally used in the Specifications. The words "shall," "shall be," or "shall comply with," depending on the context, are implied where a colon (:) is used within a sentence or phrase.
2. Specification requirements are to be performed by Contractor unless specifically stated otherwise.

B. Division 01 General Requirements: Requirements of Sections in Division 01 apply to the Work of all Sections in the Specifications.

C. Drawing Coordination: Requirements for materials and products identified on Drawings are described in detail in the Specifications. One or more of the following are used on Drawings to identify materials and products:

1. Terminology: Materials and products are identified by the typical generic terms used in the individual Specifications Sections.
2. Abbreviations: Materials and products are identified by abbreviations published as part of the U.S. National CAD Standard.
3. Keynoting: Materials and products are identified by reference keynotes referencing Specification Section numbers found in this Project Manual.

PART 2 - PRODUCTS (Not Used)

PART 3 - EXECUTION (Not Used)

END OF SECTION 011000

SECTION 01 21 00

ALLOWANCES

PART 1 - GENERAL

1.1 RELATED DOCUMENTS

A. Drawings and general provisions of the Contract, including General and Supplementary Conditions and other Division 01 Specification Sections, apply to this Section.

1.2 SUMMARY

A. Section includes administrative and procedural requirements governing allowances.

B. Types of allowances include the following:

1. Lump-sum allowances.
2. Unit-cost allowances.
3. Quantity allowances.
4. Contingency allowances.
5. Testing and inspecting allowances.

C. Related Requirements:

1. Section 012200 "Unit Prices" for procedures for using unit prices, including adjustment of quantity allowances when applicable.
2. Section 014000 "Quality Requirements" for procedures governing the use of allowances for field testing by an independent testing agency.

1.3 DEFINITIONS

A. Allowance: A quantity of work or dollar amount included in the Contract, established in lieu of additional requirements, used to defer selection of actual materials and equipment to a later date when direction will be provided to Contractor. If necessary, additional requirements will be issued by Change Order.

1.4 SELECTION AND PURCHASE

A. At the earliest practical date after award of the Contract, advise Architect of the date when final selection, or purchase and delivery, of each product or system described by an allowance must be completed by the Owner to avoid delaying the Work.

B. At Architect's request, obtain proposals for each allowance for use in making final selections. Include recommendations that are relevant to performing the Work.

C. Purchase products and systems selected by Architect from the designated supplier.

1.5 ACTION SUBMITTALS

A. Submit proposals for purchase of products or systems included in allowances in the form specified for Change Orders.

1.6 INFORMATIONAL SUBMITTALS

A. Submit invoices or delivery slips to show actual quantities of materials delivered to the site for use in fulfillment of each allowance.

B. Submit time sheets and other documentation to show labor time and cost for installation of allowance items that include installation as part of the allowance.

C. Coordinate and process submittals for allowance items in same manner as for other portions of the Work.

1.7 LUMP-SUM ALLOWANCES

A. Allowance shall include cost to Contractor of specific products and materials ordered by Owner or selected by Architect under allowance and shall include freight, and delivery to Project site.

B. Unless otherwise indicated, Contractor's costs for receiving and handling at Project site, labor, installation, overhead and profit, and similar costs related to products and materials ordered by Owner or selected by Architect under allowance shall be included as part of the Contract Sum and not part of the allowance.

C. Unused Materials: Return unused materials purchased under an allowance to manufacturer or supplier for credit to Owner, after installation has been completed and accepted.

1. If requested by Architect, retain and prepare unused material for storage by Owner. Deliver unused material to Owner's storage space as directed.

1.8 UNIT-COST ALLOWANCES

A. Allowance shall include cost to Contractor of specific products and materials ordered by Owner or selected by Architect under allowance and shall include freight, and delivery to Project site.

B. Unless otherwise indicated, Contractor's costs for receiving and handling at Project site, labor, installation, overhead and profit, and similar costs related to products and materials ordered by Owner or selected by Architect under allowance shall be included as part of the Contract Sum and not part of the allowance.

C. Unused Materials: Return unused materials purchased under an allowance to manufacturer or supplier for credit to Owner, after installation has been completed and accepted.

1. If requested by Architect, retain and prepare unused material for storage by Owner. Deliver unused material to Owner's storage space as directed.

1.9 QUANTITY ALLOWANCES

A. Allowance shall include cost to Contractor of specific products and materials ordered by Owner or selected by Architect under allowance and shall include freight, and delivery to Project site.

B. Unless otherwise indicated, Contractor's costs for receiving and handling at Project site, labor, installation, overhead and profit, and similar costs related to products and materials ordered by Owner or selected by Architect under allowance shall be included as part of the Contract Sum and not part of the allowance.

C. Unused Materials: Return unused materials purchased under an allowance to manufacturer or supplier for credit to Owner, after installation has been completed and accepted.

1. If requested by Architect, retain and prepare unused material for storage by Owner. Deliver unused material to Owner's storage space as directed.

1.10 CONTINGENCY ALLOWANCES

A. Use the contingency allowance only as directed by Architect for Owner's purposes and only by Change Orders that indicate amounts to be charged to the allowance.

B. Contractor's overhead, profit, and related costs for products and equipment ordered by Owner under the contingency allowance are included in the allowance and are not part of the Contract Sum. These costs include delivery, installation, insurance, equipment rental, and similar costs.

C. Change Orders authorizing use of funds from the contingency allowance will include Contractor's related costs and reasonable overhead and profit.

D. At Project closeout, credit unused amounts remaining in the contingency allowance to Owner by Change Order.

1.11 TESTING AND INSPECTING ALLOWANCES

A. Testing and inspecting allowances include the cost of engaging testing agencies, actual tests and inspections, and reporting results.

B. The allowance does not include incidental labor required to assist the testing agency or costs for retesting if previous tests and inspections result in failure. The cost for incidental labor to assist the testing agency shall be included in the Contract Sum.

C. Costs of testing and inspection services not specifically required by the Contract Documents are Contractor responsibilities and are not included in the allowance.

D. At Project closeout, credit unused amounts remaining in the testing and inspecting allowance to Owner by Change Order.

1.12 ADJUSTMENT OF ALLOWANCES

A. Allowance Adjustment: To adjust allowance amounts, prepare a Change Order proposal based on the difference between purchase amount and the allowance,

multiplied by final measurement of work-in-place where applicable. If applicable, include reasonable allowances for cutting losses, tolerances, mixing wastes, normal product imperfections, required maintenance materials, and similar margins.

1. Include installation costs in purchase amount only where indicated as part of the allowance.
2. If requested, prepare explanation and documentation to substantiate distribution of overhead costs and other markups.
3. Submit substantiation of a change in scope of Work, if any, claimed in Change Orders related to unit-cost allowances.
4. Owner reserves the right to establish the quantity of work-in-place by independent quantity survey, measure, or count.

B. Submit claims for increased costs due to a change in the scope or nature of the allowance described in the Contract Documents, whether for the purchase order amount or Contractor's handling, labor, installation, overhead, and profit.

1. Do not include Contractor's or subcontractor's indirect expense in the Change Order cost amount unless it is clearly shown that the nature or extent of Work has changed from what could have been foreseen from information in the Contract Documents.
2. No change to Contractor's indirect expense is permitted for selection of higher- or lower-priced materials or systems of the same scope and nature as originally indicated.

PART 2 - PRODUCTS (Not Used)

PART 3 - EXECUTION

3.1 EXAMINATION

A. Examine products covered by an allowance promptly on delivery for damage or defects. Return damaged or defective products to manufacturer for replacement.

3.2 PREPARATION

A. Coordinate materials and their installation for each allowance with related materials and installations to ensure that each allowance item is completely integrated and interfaced with related work.

3.3 SCHEDULE OF ALLOWANCES

A. Allowance No. 1: Lump-Sum Allowance: Include the sum of $30,000.00 for aggregate base remediation.

1. This allowance includes material, receiving, handling, and installation costs, and Contractor overhead and profit.

END OF SECTION 012100

SECTION 01 22 00

UNIT PRICES

PART 1 – GENERAL

1.1 RELATED DOCUMENTS

A. Drawings and general provisions of the Contract, including General and Supplementary Conditions and other Division 01 Specification Sections, apply to this Section, including – but not limited to – the following:

1. BID FORM: Quotation of cost for Unit Prices.

1.2 SUMMARY

A. Section includes administrative and procedural requirements associated with Unit Prices requested for the convenience of Wayne State University.

B. Related Sections:

1. Sections of this Project Manual related to each Unit Price.

1.3 DEFINITIONS

A. Each Unit Price shall include all necessary materials, equipment, labor, delivery, installation, insurance, overhead and profit, applicable taxes, and any other cost or expense, in connection with or incidental to, the performance of that portion of the Work to which the respective Unit Price applies.

B. The Unit Prices offered on the Bid Form:

1. Will not obligate Wayne State University to authorize expenditures for those Unit Prices. No payment for a Unit Price will be considered without the written permission of the Contracting Officer specifically approving that portion of the Work to which the respective Unit Price applies.

2. May be used to increase the Total Contract Amount by Change Order based on unforeseen existing conditions determined in the field by the Contracting Officer at the time of construction.

C. Wayne State University reserves the right to reject any proposal that indicates an unbalanced bid or price that is not realistic for the Work.

1.4 PROJECT CONDITIONS

A. Field Measurements: The Contractor is required to submit measurements and quantities to the Architect/Engineer for verification.

B. Wayne State University reserves the right to:

1. Reject the Contractor's measurement of work-in-place that involves the use of established Unit Prices.

PART 2 – PRODUCTS (Not Used)

PART 3 – EXECUTION

3.1 SCHEDULE (SUPPLEMENTAL)

A. Existing Aggregate Base Remediation: At the direction of the Engineer and Wayne State University, Contractor shall remove areas of existing aggregate base failing proof roll operations to a depth of 12″ below existing grade. Contractor to compact existing subgrade in excavated areas to 98% of in-situ soils maximum dry density and to install 12″ of MDOT 21AA aggregate base to match surrounding grades. Material shall be installed in minimum 4″ lifts and fine graded to re-establish planarity with surrounding grades. Provide a cost to remove and replace 10% of existing court footprint.

END OF SECTION 012200

SECTION 01 25 00

SUBSTITUTION PROCEDURES

PART 1 - GENERAL

1.1 RELATED DOCUMENTS

A. Drawings and general provisions of the Contract, including General and Supplementary Conditions and other Division 01 Specification Sections, apply to this Section.

1.2 SUMMARY

A. Section includes administrative and procedural requirements for substitutions.

1.3 DEFINITIONS

A. Substitutions: Changes in products, materials, equipment, and methods of construction from those required by the Contract Documents and proposed by Contractor.

1. Substitutions for Cause: Changes proposed by Contractor that are required due to changed Project conditions, such as unavailability of product, regulatory changes, or unavailability of required warranty terms.
2. Substitutions for Convenience: Changes proposed by Contractor or Owner that are not required in order to meet other Project requirements but may offer advantage to Contractor or Owner.

1.4 ACTION SUBMITTALS

A. Substitution Requests: Submit three copies of each request for consideration. Identify product or fabrication or installation method to be replaced. Include Specification Section number and title and Drawing numbers and titles.

1. Substitution Request Form: Use CSI Form 13.1A.
2. Documentation: Show compliance with requirements for substitutions and the following, as applicable:

a. Statement indicating why specified product or fabrication or installation cannot be provided, if applicable.

b. Coordination information, including a list of changes or revisions needed to other parts of the Work and to construction performed by Owner and separate contractors that will be necessary to accommodate proposed substitution.

c. Detailed comparison of significant qualities of proposed substitution with those of the Work specified. Include annotated copy of applicable Specification Section. Significant qualities may include attributes such as performance, weight, size, durability, visual effect, sustainable design characteristics, warranties, and specific features and requirements indicated. Indicate deviations, if any, from the Work specified.

d. Product Data, including drawings and descriptions of products and fabrication and installation procedures.

e. Samples, where applicable or requested.

f. Certificates and qualification data, where applicable or requested.

g. List of similar installations for completed projects with project names and addresses and names and addresses of architects and owners.

h. Material test reports from a qualified testing agency indicating and interpreting test results for compliance with requirements indicated.

i. Detailed comparison of Contractor's construction schedule using proposed substitution with products specified for the Work, including effect on the overall Contract Time. If specified product or method of construction cannot be provided within the Contract Time, include letter from manufacturer, on manufacturer's letterhead, stating date of receipt of purchase order, lack of availability, or delays in delivery.

j. Cost information, including a proposal of change, if any, in the Contract Sum.

k. Contractor's certification that proposed substitution complies with requirements in the Contract Documents except as indicated in substitution request, is compatible with related materials, and is appropriate for applications indicated.

l. Contractor's waiver of rights to additional payment or time that may subsequently become necessary because of failure of proposed substitution to produce indicated results.

3. Architect's Action: If necessary, Architect will request additional information or documentation for evaluation within seven days of receipt of a request for substitution. Architect will notify Contractor of acceptance or rejection of proposed substitution within 15 days of receipt of request, or seven days of receipt of additional information or documentation, whichever is later.

    a. Forms of Acceptance: Change Order, Construction Change Directive, or Architect's Supplemental Instructions for minor changes in the Work.
    b. Use product specified if Architect does not issue a decision on use of a proposed substitution within time allocated.

1.5 QUALITY ASSURANCE

A. Compatibility of Substitutions: Investigate and document compatibility of proposed substitution with related products and materials. Engage a qualified testing agency to perform compatibility tests recommended by manufacturers.

1.6 PROCEDURES

A. Coordination: Revise or adjust affected work as necessary to integrate work of the approved substitutions.

PART 2 - PRODUCTS

2.1 SUBSTITUTIONS

A. Substitutions for Cause: Submit requests for substitution immediately on discovery of need for change, but not later than 15 days prior to time required for preparation and review of related submittals.

1. Conditions: Architect will consider Contractor's request for substitution when the following conditions are satisfied. If the following conditions are not satisfied, Architect will return requests without action, except to record noncompliance with these requirements:

    a. Requested substitution is consistent with the Contract Documents and will produce indicated results.

    b. Substitution request is fully documented and properly submitted.

c. Requested substitution will not adversely affect Contractor's construction schedule.

d. Requested substitution has received necessary approvals of authorities having jurisdiction.

e. Requested substitution is compatible with other portions of the Work.

f. Requested substitution has been coordinated with other portions of the Work.

g. Requested substitution provides specified warranty.

h. If requested substitution involves more than one contractor, requested substitution has been coordinated with other portions of the Work, is uniform and consistent, is compatible with other products, and is acceptable to all contractors involved.

B. Substitutions for Convenience: Not allowed.

PART 3 - EXECUTION (Not Used)

END OF SECTION 012500

SECTION 013200

CONSTRUCTION PROGRESS DOCUMENTATION

PART 1 - GENERAL

1.1 RELATED DOCUMENTS

A. Drawings and general provisions of the Contract, including General and Supplementary Conditions and other Division 01 Specification Sections, apply to this Section.

1.2 SUMMARY

A. Section includes administrative and procedural requirements for documenting the progress of construction during performance of the Work, including the following:

1. Startup construction schedule.
2. Contractor's Construction Schedule.
3. Construction schedule updating reports.
4. Daily construction reports.
5. Material location reports.
6. Site condition reports.
7. Unusual event reports.

B. Related Requirements:
1. Section 014000 "Quality Requirements" for schedule of tests and inspections.

1.3 DEFINITIONS

A. Activity: A discrete part of a project that can be identified for planning, scheduling, monitoring, and controlling the construction Project. Activities included in a construction schedule consume time and resources.

1. Critical Activity: An activity on the critical path that must start and finish on the planned early start and finish times.
2. Predecessor Activity: An activity that precedes another activity in the network.

3. Successor Activity: An activity that follows another activity in the network.

B. Cost Loading: The allocation of the schedule of values for completing an activity as scheduled. The sum of costs for all activities must equal the total Contract Sum.

C. CPM: Critical path method, which is a method of planning and scheduling a construction project where activities are arranged based on activity relationships. Network calculations determine the critical path of Project and when activities can be performed.

D. Critical Path: The longest connected chain of interdependent activities through the network schedule that establishes the minimum overall Project duration and contains no float.

E. Event: The starting or ending point of an activity.

F. Float: The measure of leeway in starting and completing an activity.

1. Float time is not for the exclusive use or benefit of either Owner or Contractor, but is a jointly owned, expiring Project resource available to both parties as needed to meet schedule milestones and Contract completion date.
2. Free float is the amount of time an activity can be delayed without adversely affecting the early start of the successor activity.
3. Total float is the measure of leeway in starting or completing an activity without adversely affecting the planned Project completion date.

G. Resource Loading: The allocation of manpower and equipment necessary for completing an activity as scheduled.

1.4 INFORMATIONAL SUBMITTALS

A. Format for Submittals: Submit required submittals in the following format:

1. Working electronic copy of schedule file.
2. PDF file.
3. Two paper copies, of sufficient size to display entire period or schedule, as required.

B. Startup construction schedule.

1. Submittal of cost-loaded startup construction schedule will not constitute approval of schedule of values for cost-loaded activities.

C. Startup Network Diagram: Of size required to display entire network for entire construction period. Show logic ties for activities.

D. Contractor's Construction Schedule: Initial schedule, of size required to display entire schedule for entire construction period.

1. Submit a working digital copy of schedule, using software indicated, and labeled to comply with requirements for submittals.

E. CPM Reports: Concurrent with CPM schedule, submit each of the following reports. Format for each activity in reports shall contain activity number, activity description, cost and resource loading, original duration, remaining duration, early start date, early finish date, late start date, late finish date, and total float in calendar days.

1. Activity Report: List of activities sorted by activity number and then early start date, or actual start date if known.
2. Logic Report: List of preceding and succeeding activities for each activity, sorted in ascending order by activity number and then by early start date, or actual start date if known.
3. Total Float Report: List of activities sorted in ascending order of total float.
4. Earnings Report: Compilation of Contractor's total earnings from commencement of the Work until most recent Application for Payment.

F. Construction Schedule Updating Reports: Submit with Applications for Payment.

G. Daily Construction Reports: Submit at weekly intervals.

H. Material Location Reports: Submit at monthly intervals.

I. Site Condition Reports: Submit at time of discovery of differing conditions.

J. Unusual Event Reports: Submit at time of unusual event.

K. Qualification Data: For scheduling consultant.

1.5 QUALITY ASSURANCE

A. Scheduling Consultant Qualifications: An experienced specialist in CPM scheduling and reporting, with capability of producing CPM reports and diagrams within 24 hours of Architect's request.

B. Prescheduling Conference: Conduct conference at Project site to comply with requirements in Section 013100 "Project Management and Coordination." Review methods and procedures related to the preliminary construction schedule and Contractor's Construction Schedule, including, but not limited to, the following:

1. Review software limitations and content and format for reports.
2. Verify availability of qualified personnel needed to develop and update schedule.
3. Discuss constraints, including phasing and partial Owner occupancy.
4. Review delivery dates for Owner-furnished products.
5. Review schedule for work of Owner's separate contracts.
6. Review submittal requirements and procedures.
7. Review time required for review of submittals and resubmittals.
8. Review requirements for tests and inspections by independent testing and inspecting agencies.
9. Review time required for Project closeout and Owner startup procedures, including commissioning activities.
10. Review and finalize list of construction activities to be included in schedule.
11. Review procedures for updating schedule.

1.6 COORDINATION

A. Coordinate Contractor's Construction Schedule with the schedule of values, list of subcontracts, submittal schedule, progress reports, payment requests, and other required schedules and reports.

1. Secure time commitments for performing critical elements of the Work from entities involved.
2. Coordinate each construction activity in the network with other activities, and schedule them in proper sequence.

1.7 CONTRACTOR'S CONSTRUCTION SCHEDULE

A. Computer Scheduling Software: Prepare schedules using current version of a program that has been developed specifically to manage construction schedules.

B. Scheduling Consultant: Engage a consultant to provide planning, evaluation, and reporting, using CPM scheduling.

1. In-House Option: Owner may waive requirement to retain a consultant if Contractor employs skilled personnel with experience in CPM scheduling and reporting techniques. Submit qualifications.
2. Meetings: Scheduling consultant shall attend all meetings related to Project progress, alleged delays, and time impact.

C. Time Frame: Extend schedule from date established for commencement of the Work to date of Substantial Completion.

1. Contract completion date shall not be changed by submission of a schedule that shows an early completion date, unless specifically authorized by Change Order.

D. Activities: Treat each floor or separate area as a separate numbered activity for each main element of the Work. Comply with the following:

1. Activity Duration: Define activities so no activity is longer than 20 days, unless specifically allowed by Architect.
2. Temporary Facilities: Indicate start and completion dates for the following as applicable:

    a. Securing of approvals and permits required for performance of the Work.
    b. Temporary facilities.
    c. Construction of mock-ups, prototypes and samples.
    d. Owner interfaces and furnishing of items.
    e. Interfaces with Separate Contracts.
    f. Regulatory agency approvals.
    g. Punch list.

3. Procurement Activities: Include procurement process activities for the following long lead-time items and major items, requiring a cycle of more than 60 days, as separate activities in schedule. Procurement cycle activities include, but are not limited to, submittals, approvals, purchasing, fabrication, and delivery.

4. Submittal Review Time: Include review and resubmittal times indicated in Section 013300 "Submittal Procedures" in schedule. Coordinate submittal review times in Contractor's Construction Schedule with submittal schedule.

5. Startup and Testing Time: Include no fewer than 15 days for startup and testing.
6. Commissioning Time: Include no fewer than 15 days for commissioning.
7. Substantial Completion: Indicate completion in advance of date established for Substantial Completion, and allow time for Architect's and Construction Manager's administrative procedures necessary for certification of Substantial Completion.
8. Punch List and Final Completion: Include not more than 30 days for completion of punch list items and Final Completion.

E. Constraints: Include constraints and work restrictions indicated in the Contract Documents and as follows in schedule, and show how the sequence of the Work is affected.

1. Phasing: Arrange list of activities on schedule by phase.
2. Work under More Than One Contract: Include a separate activity for each contract.
3. Work by Owner: Include a separate activity for each portion of the Work performed by Owner.
4. Products Ordered in Advance: Include a separate activity for each product. Include delivery date indicated in Section 011000 "Summary." Delivery dates indicated stipulate the earliest possible delivery date.
5. Owner-Furnished Products: Include a separate activity for each product. Include delivery date indicated in Section 011000 "Summary." Delivery dates indicated stipulate the earliest possible delivery date.
6. Work Restrictions: Show the effect of the following items on the schedule:

    a. Coordination with existing construction.
    b. Limitations of continued occupancies.
    c. Uninterruptible services.
    d. Partial occupancy before Substantial Completion.
    e. Use-of-premises restrictions.
    f. Provisions for future construction.
    g. Seasonal variations.
    h. Environmental control.

7. Work Stages: Indicate important stages of construction for each major portion of the Work, including, but not limited to, the following:

    a. Subcontract awards.
    b. Submittals.
    c. Purchases.
    d. Mockups.
    e. Fabrication.
    f. Sample testing.
    g. Deliveries.
    h. Installation.
    i. Tests and inspections.
    j. Adjusting.
    k. Curing.
    l. Startup and placement into final use and operation.
    m. Commissioning.

8. Construction Areas: Identify each major area of construction for each major portion of the Work. Indicate where each construction activity within a major area must be sequenced or integrated with other construction activities to provide for the following:

    a. Structural completion.
    b. Temporary enclosure and space conditioning.
    c. Permanent space enclosure.
    d. Completion of mechanical installation.
    e. Completion of electrical installation.
    f. Substantial Completion.

F. Milestones: Include milestones indicated in the Contract Documents in schedule, including, but not limited to, the Notice to Proceed, Substantial Completion, and Final Completion.

G. Cost Correlation: Superimpose a cost correlation timeline, indicating planned and actual costs. On the line, show planned and actual dollar volume of the Work performed as of planned and actual dates used for preparation of payment requests.

H. Upcoming Work Summary: Prepare summary report indicating activities scheduled to occur or commence prior to submittal of next schedule update. Summarize the following issues:

    1. Unresolved issues.
    2. Unanswered Requests for Information.

3. Rejected or unreturned submittals.
4. Notations on returned submittals.
5. Pending modifications affecting the Work and the Contract Time.

I. Contractor's Construction Schedule Updating: At monthly intervals, update schedule to reflect actual construction progress and activities. Issue schedule one week before each regularly scheduled progress meeting.

1. Revise schedule immediately after each meeting or other activity where revisions have been recognized or made. Issue updated schedule concurrently with the report of each such meeting.
2. Include a report with updated schedule that indicates every change, including, but not limited to, changes in logic, durations, actual starts and finishes, and activity durations.
3. As the Work progresses, indicate Final Completion percentage for each activity.

J. Recovery Schedule: When periodic update indicates the Work is 14 or more calendar days behind the current approved schedule, submit a separate recovery schedule indicating means by which Contractor intends to regain compliance with the schedule. Indicate changes to working hours, working days, crew sizes, equipment required to achieve compliance, and date by which recovery will be accomplished.

K. Distribution: Distribute copies of approved schedule to Architect, Construction Manager, Owner, separate contractors, testing and inspecting agencies, and other parties identified by Contractor with a need-to-know schedule responsibility.

1. Post copies in Project meeting rooms and temporary field offices.
2. When revisions are made, distribute updated schedules to the same parties and post in the same locations. Delete parties from distribution when they have completed their assigned portion of the Work and are no longer involved in performance of construction activities.

1.8 CPM SCHEDULE REQUIREMENTS

A. Prepare network diagrams using AON (activity-on-node) format.

B. Startup Network Diagram: Submit diagram within 14 days of date established for commencement of the Work. Outline significant construction activities for the first 90 days of construction. Include skeleton diagram for the remainder of the Work and a cash requirement prediction based on indicated activities.

C. CPM Schedule: Prepare Contractor's Construction Schedule using a cost- and resource-loaded, time-scaled CPM network analysis diagram for the Work.

1. Develop network diagram in sufficient time to submit CPM schedule, so it can be accepted for use no later than 60 days after date established for commencement of the Work.

   a. Failure to include any work item required for performance of this Contract shall not excuse Contractor from completing all work within applicable completion dates.

2. Conduct educational workshops to train and inform key Project personnel, including subcontractors' personnel, in proper methods of providing data and using CPM schedule information.
3. Establish procedures for monitoring and updating CPM schedule and for reporting progress. Coordinate procedures with progress meeting and payment request dates.
4. Use "one workday" as the unit of time for individual activities. Indicate nonworking days and holidays incorporated into the schedule to coordinate with the Contract Time.

D. CPM Schedule Preparation: Prepare a list of all activities required to complete the Work. Using the startup network diagram, prepare a skeleton network to identify probable critical paths.

1. Activities: Indicate the estimated time duration, sequence requirements, and relationship of each activity in relation to other activities. Include estimated time frames for the following activities:

   a. Preparation and processing of submittals.
   b. Mobilization and demobilization.
   c. Purchase of materials.
   d. Delivery.
   e. Fabrication.
   f. Utility interruptions.
   g. Installation.
   h. Work by Owner that may affect or be affected by Contractor's activities.
   i. Testing and inspection.
   j. Commissioning.
   k. Punch list and Final Completion.
   l. Activities occurring following Final Completion.

2. Critical Path Activities: Identify critical path activities, including those for interim completion dates. Scheduled start and completion dates shall be consistent with Contract milestone dates.
3. Processing: Process data to produce output data on a computer-drawn, time-scaled network. Revise data, reorganize activity sequences, and reproduce as often as necessary to produce the CPM schedule within the limitations of the Contract Time.
4. Format: Mark the critical path. Locate the critical path near center of network; locate paths with most float near the edges.

    a. Subnetworks on separate sheets are permissible for activities clearly off the critical path.

5. Cost- and Resource-Loading of CPM Schedule: Assign cost to construction activities on the CPM schedule. Do not assign costs to submittal activities. Obtain Architect's approval prior to assigning costs to fabrication and delivery activities. Assign costs under main subcontracts for testing and commissioning activities, operation and maintenance manuals, punch list activities, Project record documents, and demonstration and training (if applicable), in the amount of 5 percent of the Contract Sum.

    a. Each activity cost shall reflect an appropriate value subject to approval by Architect.
    b. Total cost assigned to activities shall equal the total Contract Sum.

E. Contract Modifications: For each proposed contract modification and concurrent with its submission, prepare a time-impact analysis using a network fragment to demonstrate the effect of the proposed change on the overall Project schedule.

F. Initial Issue of Schedule: Prepare initial network diagram from a sorted activity list indicating straight "early start-total float." Identify critical activities. Prepare tabulated reports showing the following:

1. Contractor or subcontractor and the Work or activity.
2. Description of activity.
3. Main events of activity.
4. Immediate preceding and succeeding activities.
5. Early and late start dates.
6. Early and late finish dates.
7. Activity duration in workdays.
8. Total float or slack time.
9. Average size of workforce.

10. Dollar value of activity (coordinated with the schedule of values).

G. Schedule Updating: Concurrent with making revisions to schedule, prepare tabulated reports showing the following:

1. Identification of activities that have changed.
2. Changes in early and late start dates.
3. Changes in early and late finish dates.
4. Changes in activity durations in workdays.
5. Changes in the critical path.
6. Changes in total float or slack time.
7. Changes in the Contract Time.

H. Value Summaries: Prepare two cumulative value lists, sorted by finish dates.

1. In first list, tabulate activity number, early finish date, dollar value, and cumulative dollar value.
2. In second list, tabulate activity number, late finish date, dollar value, and cumulative dollar value.
3. In subsequent issues of both lists, substitute actual finish dates for activities completed as of list date.
4. Prepare list for ease of comparison with payment requests; coordinate timing with progress meetings.

    a. In both value summary lists, tabulate "actual percent complete" and "cumulative value completed" with total at bottom.
    b. Submit value summary printouts one week before each regularly scheduled progress meeting.

1.9 REPORTS

A. Daily Construction Reports: Prepare a daily construction report recording the following information concerning events at Project site:

1. List of subcontractors at Project site.
2. List of separate contractors at Project site.
3. Approximate count of personnel at Project site.
4. Equipment at Project site.
5. Material deliveries.
6. High and low temperatures and general weather conditions, including presence of rain or snow.
7. Testing and inspection.
8. Accidents.

9. Meetings and significant decisions.
10. Unusual events.
11. Stoppages, delays, shortages, and losses.
12. Meter readings and similar recordings.
13. Emergency procedures.
14. Orders and requests of authorities having jurisdiction.
15. Change Orders received and implemented.
16. Construction Change Directives received and implemented.
17. Services connected and disconnected.
18. Equipment or system tests and startups.
19. Partial completions and occupancies.
20. Substantial Completions authorized.

B. Material Location Reports: At weekly intervals, prepare and submit a comprehensive list of materials delivered to and stored at Project site. List shall be cumulative, showing materials previously reported plus items recently delivered. Include with list a statement of progress on and delivery dates for materials or items of equipment fabricated or stored away from Project site. Indicate the following categories for stored materials:

1. Material stored prior to previous report and remaining in storage.
2. Material stored prior to previous report and since removed from storage and installed.
3. Material stored following previous report and remaining in storage.

C. Site Condition Reports: Immediately on discovery of a difference between site conditions and the Contract Documents, prepare and submit a detailed report. Submit with a Request for Information. Include a detailed description of the differing conditions, together with recommendations for changing the Contract Documents.

D. Unusual Event Reports: When an event of an unusual and significant nature occurs at Project site, whether or not related directly to the Work, prepare and submit a special report. List chain of events, persons participating, responses by Contractor's personnel, evaluation of results or effects, and similar pertinent information. Advise Owner in advance when these events are known or predictable.

1. Submit unusual event reports directly to Owner within one day(s) of an occurrence. Distribute copies of report to parties affected by the occurrence.

PART 2 - PRODUCTS (Not Used)

PART 3 - EXECUTION (Not Used)

END OF SECTION 013200

SECTION 01 33 00

SUBMITTAL PROCEDURES

PART 1 - GENERAL

1.1 RELATED DOCUMENTS

A. Drawings and general provisions of the Contract, including General and Supplementary Conditions and other Division 01 Specification Sections, apply to this Section.

1.2 SUMMARY

A. Section includes requirements for the submittal schedule and administrative and procedural requirements for submitting Shop Drawings, Product Data, Samples, and other submittals.

1.3 DEFINITIONS

A. Action Submittals: Written and graphic information and physical samples that require Architect's responsive action. Action submittals are those submittals indicated in individual Specification Sections as "action submittals."

B. Informational Submittals: Written and graphic information and physical samples that do not require Architect's responsive action. Submittals may be rejected for not complying with requirements. Informational submittals are those submittals indicated in individual Specification Sections as "informational submittals."

C. File Transfer Protocol (FTP): Communications protocol that enables transfer of files to and from another computer over a network and that serves as the basis for standard Internet protocols. An FTP site is a portion of a network located outside of network firewalls within which internal and external users are able to access files.

D. Portable Document Format (PDF): An open standard file format licensed by Adobe Systems used for representing documents in a device-independent and display resolution-independent fixed-layout document format.

1.4 ACTION SUBMITTALS

A. Submittal Schedule: Submit a schedule of submittals, arranged in chronological order by dates required by construction schedule. Include time required for review, ordering, manufacturing, fabrication, and delivery when establishing dates. Include additional time required for making corrections or revisions to submittals noted by Architect and additional time for handling and reviewing submittals required by those corrections.

1. Coordinate submittal schedule with list of subcontracts, the schedule of values, and Contractor's construction schedule.
2. Initial Submittal: Submit concurrently with startup construction schedule. Include submittals required during the first 60 days of construction. List those submittals required to maintain orderly progress of the Work and those required early because of long lead time for manufacture or fabrication.
3. Final Submittal: Submit concurrently with the first complete submittal of Contractor's construction schedule.
   a. Submit revised submittal schedule to reflect changes in current status and timing for submittals.
4. Format: Arrange the following information in a tabular format:
   a. Scheduled date for first submittal.
   b. Specification Section number and title.
   c. Submittal category: Action; informational.
   d. Name of subcontractor.
   e. Description of the Work covered.
   f. Scheduled date for Architect's final release or approval.
   g. Scheduled date of fabrication.

1.5 SUBMITTAL ADMINISTRATIVE REQUIREMENTS

A. Architect's Digital Data Files: Electronic digital data files of the Contract Drawings will not be provided by Architect for Contractor's use in preparing submittals.

B. Coordination: Coordinate preparation and processing of submittals with performance of construction activities.

1. Coordinate each submittal with fabrication, purchasing, testing, delivery, other submittals, and related activities that require sequential activity.
2. Submit all submittal items required for each Specification Section concurrently unless partial submittals for portions of the Work are indicated on approved submittal schedule.
3. Submit action submittals and informational submittals required by the same Specification Section as separate packages under separate transmittals.
4. Coordinate transmittal of different types of submittals for related parts of the Work so processing will not be delayed because of need to review submittals concurrently for coordination.
    a. Architect reserves the right to withhold action on a submittal requiring coordination with other submittals until related submittals are received.

C. Processing Time: Allow time for submittal review, including time for resubmittals, as follows. Time for review shall commence on Architect's receipt of submittal. No extension of the Contract Time will be authorized because of failure to transmit submittals enough in advance of the Work to permit processing, including resubmittals.
1. Initial Review: Allow 15 days for initial review of each submittal. Allow additional time if coordination with subsequent submittals is required. Architect will advise Contractor when a submittal being processed must be delayed for coordination.
2. Intermediate Review: If intermediate submittal is necessary, process it in same manner as initial submittal.
3. Resubmittal Review: Allow 15 days for review of each resubmittal.

D. Electronic Submittals: Identify and incorporate information in each electronic submittal file as follows:
1. Assemble complete submittal package into a single indexed file incorporating submittal requirements of a single Specification Section and transmittal form with links enabling navigation to each item.
2. Name file with submittal number or other unique identifier, including revision identifier.
    a. File name shall use project identifier and Specification Section number followed by a decimal point and then a sequential number

(e.g., RECF-061000.01). Resubmittals shall include an alphabetic suffix after another decimal point (e.g., RECF-061000.01.A).

3. Provide means for insertion to permanently record Contractor's review and approval markings and action taken by Architect.

4. Transmittal Form for Electronic Submittals: Use electronic form acceptable to Owner, containing the following information:

   a. Project name.

   b. Date.

   c. Name and address of Architect.

   d. Name of Construction Manager.

   e. Name of Contractor.

   f. Name of firm or entity that prepared submittal.

   g. Names of subcontractor, manufacturer, and supplier.

   h. Category and type of submittal.

   i. Submittal purpose and description.

   j. Specification Section number and title.

   k. Specification paragraph number or drawing designation and generic name for each of multiple items.

   l. Drawing number and detail references, as appropriate.

   m. Location(s) where product is to be installed, as appropriate.

   n. Related physical samples submitted directly.

   o. Indication of full or partial submittal.

   p. Transmittal number, numbered consecutively.

   q. Submittal and transmittal distribution record.

   r. Other necessary identification.

   s. Remarks.

E. Options: Identify options requiring selection by Architect.

F. Deviations and Additional Information: On an attached separate sheet, prepared on Contractor's letterhead, record relevant information, requests for data, revisions other than those requested by Architect on previous submittals, and deviations from requirements in the Contract Documents, including minor

variations and limitations. Include same identification information as related submittal.

G. Resubmittals: Make resubmittals in same form and number of copies as initial submittal.

1. Note date and content of previous submittal.

2. Note date and content of revision in label or title block and clearly indicate extent of revision.

3. Resubmit submittals until they are marked with approval notation from Architect's action stamp.

H. Distribution: Furnish copies of final submittals to manufacturers, subcontractors, suppliers, fabricators, installers, authorities having jurisdiction, and others as necessary for performance of construction activities. Show distribution on transmittal forms.

I. Use for Construction: Retain complete copies of submittals on Project site. Use only final action submittals that are marked with approval notation from Architect's action stamp.

PART 2 - PRODUCTS

2.1 SUBMITTAL PROCEDURES

A. General Submittal Procedure Requirements: Prepare and submit submittals required by individual Specification Sections. Types of submittals are indicated in individual Specification Sections.

1. Submit electronic submittals via email as PDF electronic files.

a. Architect will return annotated file. Annotate and retain one copy of file as an electronic Project record document file.

2. Certificates and Certifications Submittals: Provide a statement that includes signature of entity responsible for preparing certification. Certificates and certifications shall be signed by an officer or other individual authorized to sign documents on behalf of that entity.

a. Provide a digital signature with digital certificate on electronically submitted certificates and certifications where indicated.

B. Product Data: Collect information into a single submittal for each element of construction and type of product or equipment.

1. If information must be specially prepared for submittal because standard published data are not suitable for use, submit as Shop Drawings, not as Product Data.

2. Mark each copy of each submittal to show which products and options are applicable.

3. Include the following information, as applicable:

a. Manufacturer's catalog cuts.

b. Manufacturer's product specifications.

c. Standard color charts.

d. Statement of compliance with specified referenced standards.

e. Testing by recognized testing agency.

f. Application of testing agency labels and seals.

g. Notation of coordination requirements.

h. Availability and delivery time information.

4. Submit Product Data before or concurrent with Samples.

5. Submit Product Data in the following format:

a. PDF electronic file.

C. Shop Drawings: Prepare Project-specific information, drawn accurately to scale. Do not base Shop Drawings on reproductions of the Contract Documents or standard printed data.

1. Preparation: Fully illustrate requirements in the Contract Documents. Include the following information, as applicable:

a. Identification of products.

b. Schedules.

c. Compliance with specified standards.

d. Notation of coordination requirements.

e. Notation of dimensions established by field measurement.

f. Relationship and attachment to adjoining construction clearly indicated.

g. Seal and signature of professional engineer if specified.

2. Sheet Size: Except for templates, patterns, and similar full-size drawings, submit Shop Drawings on sheets at least 8-1/2 by 11 inches (215 by 280 mm), but no larger than 22 by 34 inches.

3. Submit Shop Drawings in the following format:

a. PDF electronic file.

D. Samples: Submit Samples for review of kind, color, pattern, and texture for a check of these characteristics with other elements and for a comparison of these characteristics between submittal and actual component as delivered and installed.

1. Transmit Samples that contain multiple, related components such as accessories together in one submittal package.

2. Identification: Attach label on unexposed side of Samples that includes the following:

a. Generic description of Sample.

b. Product name and name of manufacturer.

c. Sample source.

d. Number and title of applicable Specification Section.

e. Specification paragraph number and generic name of each item.

3. For projects where electronic submittals are required, provide corresponding electronic submittal of Sample transmittal, digital image file illustrating Sample characteristics, and identification information for record.

4. Disposition: Maintain sets of approved Samples at Project site, available for quality-control comparisons throughout the course of construction activity. Sample sets may be used to determine final acceptance of construction associated with each set.

a. Samples not incorporated into the Work, or otherwise designated as Owner's property, are the property of Contractor.

5. Samples for Initial Selection: Submit manufacturer's color charts consisting of units or sections of units showing the full range of colors, textures, and patterns available.

a. Number of Samples: Submit one full set(s) of available choices where color, pattern, texture, or similar characteristics are required to be

selected from manufacturer's product line. Architect will return submittal with options selected.

6. Samples for Verification: Submit full-size units or Samples of size indicated, prepared from same material to be used for the Work, cured and finished in manner specified, and physically identical with material or product proposed for use, and that show full range of color and texture variations expected. Samples include, but are not limited to, the following: partial sections of manufactured or fabricated components; small cuts or containers of materials; complete units of repetitively used materials; swatches showing color, texture, and pattern; color range sets; and components used for independent testing and inspection.

   a. Number of Samples: Submit three sets of Samples. Architect will retain one Sample sets; remainder will be returned. Mark up and retain one returned Sample set as a project record sample.

      1) Submit a single Sample where assembly details, workmanship, fabrication techniques, connections, operation, and other similar characteristics are to be demonstrated.

      2) If variation in color, pattern, texture, or other characteristic is inherent in material or product represented by a Sample, submit at least three sets of paired units that show approximate limits of variations.

E. Qualification Data: Prepare written information that demonstrates capabilities and experience of firm or person. Include lists of completed projects with project names and addresses, contact information of architects and owners, and other information specified.

F. Installer Certificates: Submit written statements on manufacturer's letterhead certifying that Installer complies with requirements in the Contract Documents and, where required, is authorized by manufacturer for this specific Project.

G. Product Certificates: Submit written statements on manufacturer's letterhead certifying that product complies with requirements in the Contract Documents.

H. Material Certificates: Submit written statements on manufacturer's letterhead certifying that material complies with requirements in the Contract Documents.

I. Material Test Reports: Submit reports written by a qualified testing agency, on testing agency's standard form, indicating and interpreting test results of material for compliance with requirements in the Contract Documents.

J. Product Test Reports: Submit written reports indicating that current product produced by manufacturer complies with requirements in the Contract Documents. Base reports on evaluation of tests performed by manufacturer and witnessed by a qualified testing agency, or on comprehensive tests performed by a qualified testing agency.

K. Field Test Reports: Submit written reports indicating and interpreting results of field tests performed either during installation of product or after product is installed in its final location, for compliance with requirements in the Contract Documents.

2.2 DELEGATED-DESIGN SERVICES

A. Performance and Design Criteria: Where professional design services or certifications by a design professional are specifically required of Contractor by the Contract Documents, provide products and systems complying with specific performance and design criteria indicated.

1. If criteria indicated are not sufficient to perform services or certification required, submit a written request for additional information to Architect.

B. Delegated-Design Services Certification: In addition to Shop Drawings, Product Data, and other required submittals, submit digitally signed PDF electronic file of certificate, signed and sealed by the responsible design professional, for each product and system specifically assigned to Contractor to be designed or certified by a design professional.

1. Indicate that products and systems comply with performance and design criteria in the Contract Documents. Include list of codes, loads, and other factors used in performing these services.

PART 3 - EXECUTION

3.1 CONTRACTOR'S REVIEW

A. Action and Informational Submittals: Review each submittal and check for coordination with other Work of the Contract and for compliance with the Contract Documents. Note corrections and field dimensions. Mark with approval stamp before submitting to Architect.

B. Approval Stamp: Stamp each submittal with a uniform, approval stamp. Include Project name and location, submittal number, Specification Section title and number, name of reviewer, date of Contractor's approval, and statement certifying that submittal has been reviewed, checked, and approved for compliance with the Contract Documents.

3.2 ARCHITECT'S ACTION

A. Action Submittals: Architect will review each submittal, make marks to indicate corrections or revisions required, and return it. Architect will stamp each submittal with an action stamp and will mark stamp appropriately to indicate action.

B. Informational Submittals: Architect will review each submittal and will not return it, or will return it if it does not comply with requirements. Architect will forward each submittal to appropriate party.

C. Partial submittals prepared for a portion of the Work will be reviewed when use of partial submittals has received prior approval from Architect.

D. Incomplete submittals are unacceptable, will be considered nonresponsive, and will be returned for resubmittal without review.

E. Submittals not required by the Contract Documents may be returned by the Architect without action.

END OF SECTION 013300

SECTION 014000

QUALITY REQUIREMENTS

PART 1 - GENERAL

1.1 RELATED DOCUMENTS

A. Drawings and general provisions of the Contract, including General and Supplementary Conditions and other Division 01 Specification Sections, apply to this Section.

1.2 SUMMARY

A. Section includes administrative and procedural requirements for quality assurance and quality control.

B. Testing and inspection services are required to verify compliance with requirements specified or indicated. These services do not relieve Contractor of responsibility for compliance with the Contract Document requirements.

1. Specific quality-assurance and quality-control requirements for individual work results are specified in their respective Specification Sections. Requirements in individual Sections may also cover production of standard products.
2. Specified tests, inspections, and related actions do not limit Contractor's other quality-assurance and quality-control procedures that facilitate compliance with the Contract Document requirements.
3. Requirements for Contractor to provide quality-assurance and quality-control services required by Architect, Owner, Commissioning Authority, Construction Manager, or authorities having jurisdiction are not limited by provisions of this Section.

1.3 DEFINITIONS

A. Experienced: When used with an entity or individual, "experienced," unless otherwise further described, means having successfully completed a minimum of five previous projects similar in nature, size, and extent to this Project; being familiar with special requirements indicated; and having complied with requirements of authorities having jurisdiction.

B. Field Quality-Control Tests and Inspections: Tests and inspections that are performed on-site for installation of the Work and for completed Work.

C. Installer/Applicator/Erector: Contractor or another entity engaged by Contractor as an employee, subcontractor, or sub-subcontractor, to perform a particular construction operation, including installation, erection, application, assembly, and similar operations.

1. Use of trade-specific terminology in referring to a Work result does not require that certain construction activities specified apply exclusively to specific trade(s).

D. Mockups: Physical assemblies of portions of the Work constructed to establish the standard by which the Work will be judged. Mockups are not Samples.

1. Mockups are used for one or more of the following:

a. Verify selections made under Sample submittals.
b. Demonstrate aesthetic effects.
c. Demonstrate the qualities of products and workmanship.
d. Demonstrate successful installation of interfaces between components and systems.
e. Perform preconstruction testing to determine system performance.

2. Product Mockups: Mockups that may include multiple products, materials, or systems specified in a single Section.
3. In-Place Mockups: Mockups constructed on-site in their actual final location as part of permanent construction.

E. Preconstruction Testing: Tests and inspections performed specifically for Project before products and materials are incorporated into the Work, to verify performance or compliance with specified criteria. Unless otherwise indicated, copies of reports of tests or inspections performed for other than the Project do not meet this definition.

F. Product Tests: Tests and inspections that are performed by a nationally recognized testing laboratory (NRTL) according to 29 CFR 1910.7, by a testing agency accredited according to NIST's National Voluntary Laboratory Accreditation Program (NVLAP), or by a testing agency qualified to conduct product testing and acceptable to authorities having jurisdiction, to establish product performance and compliance with specified requirements.

G. Source Quality-Control Tests and Inspections: Tests and inspections that are performed at the source (e.g., plant, mill, factory, or shop).

H. Testing Agency: An entity engaged to perform specific tests, inspections, or both. The term "testing laboratory" has the same meaning as the term "testing agency."

I. Quality-Assurance Services: Activities, actions, and procedures performed before and during execution of the Work, to guard against defects and deficiencies and substantiate that proposed construction will comply with requirements.

J. Quality-Control Services: Tests, inspections, procedures, and related actions during and after execution of the Work, to evaluate that actual products incorporated into the Work and completed construction comply with requirements. Contractor's quality-control services do not include contract administration activities performed by Architect[or Construction Manager].

1.4 DELEGATED DESIGN SERVICES

A. Performance and Design Criteria: Where professional design services or certifications by a design professional are specifically required of Contractor by the Contract Documents, provide products and systems complying with specific performance and design criteria indicated.

1. If criteria indicated are not sufficient to perform services or certification required, submit a written request for additional information to Architect.

B. Delegated Design Services Statement: Submit a statement signed and sealed by the responsible design professional, for each product and system specifically assigned to Contractor to be designed or certified by a design professional, indicating that the products and systems are in compliance with performance and design criteria indicated. Include list of codes, loads, and other factors used in performing these services.

1.5 CONFLICTING REQUIREMENTS

A. Conflicting Standards and Other Requirements: If compliance with two or more standards or requirements is specified and the standards or requirements establish different or conflicting requirements for minimum quantities or quality levels, inform the Architect regarding the conflict and obtain clarification prior to proceeding with the Work. Refer conflicting requirements that are different, but apparently equal, to Architect for clarification before proceeding.

B. Minimum Quantity or Quality Levels: The quantity or quality level shown or specified is the minimum provided or performed. The actual installation may comply exactly with the minimum quantity or quality specified, or it may exceed the minimum within reasonable limits. To comply with these requirements, indicated numeric values are minimum or maximum, as appropriate, for the context of requirements. Refer uncertainties to Architect for a decision before proceeding.

1.6 ACTION SUBMITTALS

A. Mockup Shop Drawings:

1. Include plans, sections, elevations, and details, indicating materials and size of mockup construction.
2. Indicate manufacturer and model number of individual components.
3. Provide axonometric drawings for conditions difficult to illustrate in two dimensions.

1.7 INFORMATIONAL SUBMITTALS

A. Contractor's Quality-Control Plan: For quality-assurance and quality-control activities and responsibilities.

B. Qualification Data: For Contractor's quality-control personnel.

C. Contractor's Statement of Responsibility: When required by authorities having jurisdiction, submit copy of written statement of responsibility submitted to authorities having jurisdiction before starting work on the following systems:

1. Seismic-force-resisting system, designated seismic system, or component listed in the Statement of Special Inspections.
2. Primary wind-force-resisting system or a wind-resisting component listed in the Statement of Special Inspections.

D. Testing Agency Qualifications: For testing agencies specified in "Quality Assurance" Article to demonstrate their capabilities and experience. Include proof of qualifications in the form of a recent report on the inspection of the testing agency by a recognized authority.

E. Schedule of Tests and Inspections: Prepare in tabular form and include the following:

1. Specification Section number and title.

2. Entity responsible for performing tests and inspections.
3. Description of test and inspection.
4. Identification of applicable standards.
5. Identification of test and inspection methods.
6. Number of tests and inspections required.
7. Time schedule or time span for tests and inspections.
8. Requirements for obtaining samples.
9. Unique characteristics of each quality-control service.

F. Reports: Prepare and submit certified written reports and documents as specified.

G. Permits, Licenses, and Certificates: For Owner's record, submit copies of permits, licenses, certifications, inspection reports, releases, jurisdictional settlements, notices, receipts for fee payments, judgments, correspondence, records, and similar documents established for compliance with standards and regulations bearing on performance of the Work.

1.8 REPORTS AND DOCUMENTS

A. Test and Inspection Reports: Prepare and submit certified written reports specified in other Sections. Include the following:

1. Date of issue.
2. Project title and number.
3. Name, address, telephone number, and email address of testing agency.
4. Dates and locations of samples and tests or inspections.
5. Names of individuals making tests and inspections.
6. Description of the Work and test and inspection method.
7. Identification of product and Specification Section.
8. Complete test or inspection data.
9. Test and inspection results and an interpretation of test results.
10. Record of temperature and weather conditions at time of sample-taking and testing and inspection.
11. Comments or professional opinion on whether tested or inspected Work complies with the Contract Document requirements.
12. Name and signature of laboratory inspector.
13. Recommendations on retesting and reinspecting.

B. Manufacturer's Technical Representative's Field Reports: Prepare written information documenting manufacturer's technical representative's tests and inspections specified in other Sections. Include the following:

1. Name, address, telephone number, and email address of technical representative making report.
2. Statement on condition of substrates and their acceptability for installation of product.
3. Statement that products at Project site comply with requirements.
4. Summary of installation procedures being followed, whether they comply with requirements and, if not, what corrective action was taken.
5. Results of operational and other tests and a statement of whether observed performance complies with requirements.
6. Statement of whether conditions, products, and installation will affect warranty.
7. Other required items indicated in individual Specification Sections.

C. Factory-Authorized Service Representative's Reports: Prepare written information documenting manufacturer's factory-authorized service representative's tests and inspections specified in other Sections. Include the following:

1. Name, address, telephone number, and email address of factory-authorized service representative making report.
2. Statement that equipment complies with requirements.
3. Results of operational and other tests and a statement of whether observed performance complies with requirements.
4. Statement of whether conditions, products, and installation will affect warranty.
5. Other required items indicated in individual Specification Sections.

1.9 QUALITY ASSURANCE

A. Qualifications paragraphs in this article establish the minimum qualification levels required; individual Specification Sections specify additional requirements.

B. Manufacturer Qualifications: A firm experienced in manufacturing products or systems similar to those indicated for this Project and with a record of successful in-service performance, as well as sufficient production capacity to produce required units. As applicable, procure products from manufacturers able to meet qualification requirements, warranty requirements, and technical or factory-authorized service representative requirements.

C. Fabricator Qualifications: A firm experienced in producing products similar to those indicated for this Project and with a record of successful in-service

performance, as well as sufficient production capacity to produce required units.

D. Installer Qualifications: A firm or individual experienced in installing, erecting, applying, or assembling work similar in material, design, and extent to that indicated for this Project, whose work has resulted in construction with a record of successful in-service performance.

E. Professional Engineer Qualifications: A professional engineer who is legally qualified to practice in jurisdiction where Project is located and who is experienced in providing engineering services of the kind indicated. Engineering services are defined as those performed for installations of the system, assembly, or product that is similar in material, design, and extent to those indicated for this Project.

F. Specialists: Certain Specification Sections require that specific construction activities be performed by entities who are recognized experts in those operations. Specialists will satisfy qualification requirements indicated and engage in the activities indicated.

    1. Requirements of authorities having jurisdiction supersede requirements for specialists.

G. Testing and Inspecting Agency Qualifications: An NRTL, an NVLAP, or an independent agency with the experience and capability to conduct testing and inspection indicated, as documented in accordance with ASTM E329, and with additional qualifications specified in individual Sections; and, where required by authorities having jurisdiction, that is acceptable to authorities.

H. Manufacturer's Technical Representative Qualifications: An authorized representative of manufacturer who is trained and approved by manufacturer to observe and inspect installation of manufacturer's products that are similar in material, design, and extent to those indicated for this Project.

I. Factory-Authorized Service Representative Qualifications: An authorized representative of manufacturer who is trained and approved by manufacturer to inspect, demonstrate, repair, and perform service on installations of manufacturer's products that are similar in material, design, and extent to those indicated for this Project.

J. Preconstruction Testing: Where testing agency is indicated to perform preconstruction testing for compliance with specified requirements for performance and test methods, comply with the following Contractor's responsibilities, including the following:

1. Provide test specimens representative of proposed products and construction.
2. Submit specimens in a timely manner with sufficient time for testing and analyzing results to prevent delaying the Work.
3. Provide sizes and configurations of test assemblies, mockups, and laboratory mockups to adequately demonstrate capability of products to comply with performance requirements.
4. Build site-assembled test assemblies and mockups, using installers who will perform same tasks for Project.
5. When testing is complete, remove test specimens and test assemblies, and mockups; do not reuse products on Project.
6. Testing Agency Responsibilities: Submit a certified written report of each test, inspection, and similar quality-assurance service to Architect and Commissioning Authority, through Construction Manager, with copy to Contractor. Interpret tests and inspections, and state in each report whether tested and inspected Work complies with or deviates from the Contract Documents.

K. Mockups: Before installing portions of the Work requiring mockups, build mockups for each form of construction and finish required to comply with the following requirements, using materials indicated for the completed Work:

1. Build mockups of size indicated.
2. Build mockups in location indicated or, if not indicated, as directed by Architect or Construction Manager.
3. Notify Architect and Construction Manager seven days in advance of dates and times when mockups will be constructed.
4. Employ supervisory personnel who will oversee mockup construction. Employ workers who will be employed to perform same tasks during the construction at Project.
5. Demonstrate the proposed range of aesthetic effects and workmanship.
6. Obtain Architect's and Construction Manager's approval of mockups before starting corresponding Work, fabrication, or construction.

    a. Allow seven days for initial review and each re-review of each mockup.

7. Promptly correct unsatisfactory conditions noted by Architect's preliminary review, to the satisfaction of the Architect, before completion of final mockup.
8. Approval of mockups by the Architect does not constitute approval of deviations from the Contract Documents contained in mockups unless Architect specifically approves such deviations in writing.

9. Maintain mockups during construction in an undisturbed condition as a standard for judging the completed Work.
10. Demolish and remove mockups when directed unless otherwise indicated.

1.10 QUALITY CONTROL

A. Owner Responsibilities: Where quality-control services are indicated as Owner's responsibility, Owner will engage a qualified testing agency to perform these services.

1. Owner will furnish Contractor with names, addresses, and telephone numbers of testing agencies engaged and a description of types of testing and inspection they are engaged to perform.
2. Payment for these services will be made from testing and inspection allowances specified in Section 012100 "Allowances," as authorized by Change Orders.
3. Costs for retesting and reinspecting construction that replaces or is necessitated by Work that failed to comply with the Contract Documents will be charged to Contractor, and the Contract Sum will be adjusted by Change Order.

B. Contractor Responsibilities: Tests and inspections not explicitly assigned to Owner are Contractor's responsibility. Perform additional quality-control activities, whether specified or not, to verify and document that the Work complies with requirements.

1. Unless otherwise indicated, provide quality-control services specified and those required by authorities having jurisdiction. Perform quality-control services required of Contractor by authorities having jurisdiction, whether specified or not.
2. Engage a qualified testing agency to perform quality-control services.

    a. Contractor will not employ same entity engaged by Owner, unless agreed to in writing by Owner.

3. Notify testing agencies at least 24 hours in advance of time when Work that requires testing or inspection will be performed.
4. Where quality-control services are indicated as Contractor's responsibility, submit a certified written report, in duplicate, of each quality-control service.
5. Testing and inspection requested by Contractor and not required by the Contract Documents are Contractor's responsibility.

6. Submit additional copies of each written report directly to authorities having jurisdiction, when they so direct.

C. Retesting/Reinspecting: Regardless of whether original tests or inspections were Contractor's responsibility, provide quality-control services, including retesting and reinspecting, for construction that replaced Work that failed to comply with the Contract Documents.

D. Testing Agency Responsibilities: Cooperate with Architect, Commissioning Authority, Construction Manager, and Contractor in performance of duties. Provide qualified personnel to perform required tests and inspections.

1. Notify Architect, Commissioning Authority, Construction Manager, and Contractor promptly of irregularities or deficiencies observed in the Work during performance of its services.
2. Determine the locations from which test samples will be taken and in which in-situ tests are conducted.
3. Conduct and interpret tests and inspections, and state in each report whether tested and inspected Work complies with or deviates from requirements.
4. Submit a certified written report, in duplicate, of each test, inspection, and similar quality-control service through Contractor.
5. Do not release, revoke, alter, or increase the Contract Document requirements or approve or accept any portion of the Work.
6. Do not perform duties of Contractor.

E. Manufacturer's Field Services: Where indicated, engage a factory-authorized service representative to inspect field-assembled components and equipment installation, including service connections. Report results in writing as specified in Section 013300 "Submittal Procedures."

F. Manufacturer's Technical Services: Where indicated, engage a manufacturer's technical representative to observe and inspect the Work. Manufacturer's technical representative's services include participation in preinstallation conferences, examination of substrates and conditions, verification of materials, observation of Installer activities, inspection of completed portions of the Work, and submittal of written reports.

G. Contractor's Associated Requirements and Services: Cooperate with agencies and representatives performing required tests, inspections, and similar quality-control services, and provide reasonable auxiliary services as requested. Notify agency sufficiently in advance of operations to permit assignment of personnel. Provide the following:

1. Access to the Work.
2. Incidental labor and facilities necessary to facilitate tests and inspections.
3. Adequate quantities of representative samples of materials that require testing and inspection. Assist agency in obtaining samples.
4. Facilities for storage and field curing of test samples.
5. Delivery of samples to testing agencies.
6. Preliminary design mix proposed for use for material mixes that require control by testing agency.
7. Security and protection for samples and for testing and inspection equipment at Project site.

H. Coordination: Coordinate sequence of activities to accommodate required quality-assurance and quality-control services with a minimum of delay and to avoid necessity of removing and replacing construction to accommodate testing and inspection.

1. Schedule times for tests, inspections, obtaining samples, and similar activities.

I. Schedule of Tests and Inspections: Prepare a schedule of tests, inspections, and similar quality-control services required by the Contract Documents as a component of Contractor's quality-control plan. Coordinate and submit concurrently with Contractor's Construction Schedule. Update and submit with each Application for Payment.

1. Schedule Contents: Include tests, inspections, and quality-control services, including Contractor- and Owner-retained services, commissioning activities, and other Project-required services paid for by other entities.
2. Distribution: Distribute schedule to Owner, Architect, Commissioning Authority, Construction Manager, testing agencies, and each party involved in performance of portions of the Work where tests and inspections are required.

1.11 SPECIAL TESTS AND INSPECTIONS

A. Special Tests and Inspections: Owner will engage a qualified testing agency to conduct special tests and inspections required by authorities having jurisdiction as the responsibility of Owner, as indicated in the Statement of Special Inspections attached to this Section, and as follows:
1. Notifying Architect, Commissioning Authority, Construction Manager, and Contractor promptly of irregularities and deficiencies observed in the Work during performance of its services.

2. Submitting a certified written report of each test, inspection, and similar quality-control service to Architect and Commissioning Authority, through Construction Manager, with copy to Contractor and to authorities having jurisdiction.
3. Submitting a final report of special tests and inspections at Substantial Completion, which includes a list of unresolved deficiencies.
4. Interpreting tests and inspections, and stating in each report whether tested and inspected Work complies with or deviates from the Contract Documents.
5. Retesting and reinspecting corrected Work.

PART 2 - PRODUCTS (Not Used)

PART 3 - EXECUTION

3.1 TEST AND INSPECTION LOG

A. Test and Inspection Log: Prepare a record of tests and inspections. Include the following:

1. Date test or inspection was conducted.
2. Description of the Work tested or inspected.
3. Date test or inspection results were transmitted to Architect.
4. Identification of testing agency or special inspector conducting test or inspection.

B. Maintain log at Project site. Post changes and revisions as they occur. Provide access to test and inspection log for Architect's, Commissioning Authority's, and Construction Manager's reference during normal working hours.

1. Submit log at Project closeout as part of Project Record Documents.

3.2 REPAIR AND PROTECTION

A. General: On completion of testing, inspection, sample-taking, and similar services, repair damaged construction and restore substrates and finishes.

1. Provide materials and comply with installation requirements specified in other Specification Sections or matching existing substrates and finishes. Restore patched areas and extend restoration into adjoining areas with durable seams that are as invisible as possible. Comply with the Contract

Document requirements for cutting and patching in Section 017300 "Execution."

B. Protect construction exposed by or for quality-control service activities.

C. Repair and protection are Contractor's responsibility, regardless of the assignment of responsibility for quality-control services.

END OF SECTION 014000

SECTION 01 60 00

PRODUCT REQUIREMENTS

PART 1 - GENERAL

1.1 RELATED DOCUMENTS

A. Drawings and general provisions of the Contract, including General and Supplementary Conditions and other Division 01 Specification Sections, apply to this Section.

1.2 SUMMARY

A. Section includes administrative and procedural requirements for selection of products for use in Project; product delivery, storage, and handling; manufacturers' standard warranties on products; special warranties; and comparable products.

B. Related Requirements:

1. Section 012500 "Substitution Procedures" for requests for substitutions.

1.3 DEFINITIONS

A. Products: Items obtained for incorporating into the Work, whether purchased for Project or taken from previously purchased stock. The term "product" includes the terms "material," "equipment," "system," and terms of similar intent.

1. Named Products: Items identified by manufacturer's product name, including make or model number or other designation shown or listed in manufacturer's published product literature, that is current as of date of the Contract Documents.

2. New Products: Items that have not previously been incorporated into another project or facility. Products salvaged or recycled from other projects are not considered new products.

3. Comparable Product: Product that is demonstrated and approved through submittal process to have the indicated qualities related to type, function,

dimension, in-service performance, physical properties, appearance, and other characteristics that equal or exceed those of specified product.

B. Basis-of-Design Product Specification: A specification in which a specific manufacturer's product is named and accompanied by the words "basis-of-design product," including make or model number or other designation, to establish the significant qualities related to type, function, dimension, in-service performance, physical properties, appearance, and other characteristics for purposes of evaluating comparable products of additional manufacturers named in the specification.

1.4 ACTION SUBMITTALS

A. Comparable Product Requests: Submit request for consideration of each comparable product. Identify product or fabrication or installation method to be replaced. Include Specification Section number and title and Drawing numbers and titles.

1. Include data to indicate compliance with the requirements specified in "Comparable Products" Article.
2. Architect's Action: If necessary, Architect will request additional information or documentation for evaluation within one week of receipt of a comparable product request. Architect will notify Contractor of approval or rejection of proposed comparable product request within 15 days of receipt of request, or seven days of receipt of additional information or documentation, whichever is later.
   a. Form of Approval: As specified in Section 013300 "Submittal Procedures."
   b. Use product specified if Architect does not issue a decision on use of a comparable product request within time allocated.

B. Basis-of-Design Product Specification Submittal: Comply with requirements in Section 013300 "Submittal Procedures." Show compliance with requirements.

1.5 QUALITY ASSURANCE

A. Compatibility of Options: If Contractor is given option of selecting between two or more products for use on Project, select product compatible with products previously selected, even if previously selected products were also options.

1. Each contractor is responsible for providing products and construction methods compatible with products and construction methods of other contractors.
2. If a dispute arises between contractors over concurrently selectable but incompatible products, Architect will determine which products shall be used.

1.6 PRODUCT DELIVERY, STORAGE, AND HANDLING

A. Deliver, store, and handle products using means and methods that will prevent damage, deterioration, and loss, including theft and vandalism. Comply with manufacturer's written instructions.

B. Delivery and Handling:

1. Schedule delivery to minimize long-term storage at Project site and to prevent overcrowding of construction spaces.
2. Coordinate delivery with installation time to ensure minimum holding time for items that are flammable, hazardous, easily damaged, or sensitive to deterioration, theft, and other losses.
3. Deliver products to Project site in an undamaged condition in manufacturer's original sealed container or other packaging system, complete with labels and instructions for handling, storing, unpacking, protecting, and installing.
4. Inspect products on delivery to determine compliance with the Contract Documents and to determine that products are undamaged and properly protected.

C. Storage:

1. Store products to allow for inspection and measurement of quantity or counting of units.
2. Store products that are subject to damage by the elements, under cover in a weathertight enclosure above ground, with ventilation adequate to prevent condensation.
3. Comply with product manufacturer's written instructions for temperature, humidity, ventilation, and weather-protection requirements for storage.
4. Protect stored products from damage and liquids from freezing.

1.7 PRODUCT WARRANTIES

A. Warranties specified in other Sections shall be in addition to, and run concurrent with, other warranties required by the Contract Documents. Manufacturer's disclaimers and limitations on product warranties do not relieve Contractor of obligations under requirements of the Contract Documents.

1. Manufacturer's Warranty: Written warranty furnished by individual manufacturer for a particular product and specifically endorsed by manufacturer to Owner.

2. Special Warranty: Written warranty required by the Contract Documents to provide specific rights for Owner.

B. Special Warranties: Prepare a written document that contains appropriate terms and identification, ready for execution.

1. Manufacturer's Standard Form: Modified to include Project-specific information and properly executed.

C. Submittal Time: Comply with requirements in Section 017700 "Closeout Procedures."

PART 2 - PRODUCTS

2.1 PRODUCT SELECTION PROCEDURES

A. General Product Requirements: Provide products that comply with the Contract Documents, are undamaged and, unless otherwise indicated, are new at time of installation.

1. Provide products complete with accessories, trim, finish, fasteners, and other items needed for a complete installation and indicated use and effect.

2. Standard Products: If available, and unless custom products or nonstandard options are specified, provide standard products of types that have been produced and used successfully in similar situations on other projects.

3. Owner reserves the right to limit selection to products with warranties not in conflict with requirements of the Contract Documents.

4. Where products are accompanied by the term "as selected," Architect will make selection.

5. Descriptive, performance, and reference standard requirements in the Specifications establish salient characteristics of products.

6. Or Equal: For products specified by name and accompanied by the term "or equal," or "or approved equal," or "or approved," comply with requirements in "Comparable Products" Article to obtain approval for use of an unnamed product.

B. Product Selection Procedures:

1. Product: Where Specifications name a single manufacturer and product, provide the named product that complies with requirements. Comparable products or substitutions for Contractor's convenience will not be considered.

2. Manufacturer/Source: Where Specifications name a single manufacturer or source, provide a product by the named manufacturer or source that complies with requirements. Comparable products or substitutions for Contractor's convenience will not be considered.

3. Products:

a. Restricted List: Where Specifications include a list of names of both manufacturers and products, provide one of the products listed that complies with requirements. Comparable products or substitutions for Contractor's convenience will not be considered.

b. Nonrestricted List: Where Specifications include a list of names of both available manufacturers and products, provide one of the products listed, or an unnamed product, that complies with requirements. Comply with requirements in "Comparable Products" Article for consideration of an unnamed product.

4. Manufacturers:

a. Restricted List: Where Specifications include a list of manufacturers' names, provide a product by one of the manufacturers listed that complies with requirements. Comparable products or substitutions for Contractor's convenience will not be considered.

b. Nonrestricted List: Where Specifications include a list of available manufacturers, provide a product by one of the manufacturers listed, or a product by an unnamed manufacturer, that complies with requirements. Comply with requirements in "Comparable Products" Article for consideration of an unnamed manufacturer's product.

5. Basis-of-Design Product: Where Specifications name a product, or refer to a product indicated on Drawings, and include a list of manufacturers,

provide the specified or indicated product or a comparable product by one of the other named manufacturers. Drawings and Specifications indicate sizes, profiles, dimensions, and other characteristics that are based on the product named. Comply with requirements in "Comparable Products" Article for consideration of an unnamed product by one of the other named manufacturers.

C. Visual Selection Specification: Where Specifications include the phrase "as selected by Architect from manufacturer's full range" or similar phrase, select a product that complies with requirements. Architect will select color, gloss, pattern, density, or texture from manufacturer's product line that includes both standard and premium items.

2.2 COMPARABLE PRODUCTS

A. Conditions for Consideration: Architect will consider Contractor's request for comparable product when the following conditions are satisfied. If the following conditions are not satisfied, Architect may return requests without action, except to record noncompliance with these requirements:

1. Evidence that the proposed product does not require revisions to the Contract Documents, that it is consistent with the Contract Documents and will produce the indicated results, and that it is compatible with other portions of the Work.
2. Detailed comparison of significant qualities of proposed product with those named in the Specifications. Significant qualities include attributes such as performance, weight, size, durability, visual effect, and specific features and requirements indicated.
3. Evidence that proposed product provides specified warranty.
4. List of similar installations for completed projects with project names and addresses and names and addresses of architects and owners, if requested.
5. Samples, if requested.

PART 3 - EXECUTION (Not Used)

END OF SECTION 016000

SECTION 017700

CLOSEOUT PROCEDURES

PART 1 - GENERAL

1.1 RELATED DOCUMENTS

A. Drawings and general provisions of the Contract, including General and Supplementary Conditions and other Division 01 Specification Sections, apply to this Section.

1.2 SUMMARY

A. Section includes administrative and procedural requirements for Contract closeout, including, but not limited to, the following:

1. Substantial Completion procedures.
2. Final completion procedures.
3. Warranties.
4. Final cleaning.

1.3 DEFINITIONS

A. List of Incomplete Items: Contractor-prepared list of items to be completed or corrected, prepared for the Architect's use prior to Architect's inspection, to determine if the Work is substantially complete.

1.4 ACTION SUBMITTALS

A. Product Data: For each type of cleaning agent.

B. Contractor's List of Incomplete Items: Initial submittal at Substantial Completion.

C. Certified List of Incomplete Items: Final submittal at Final Completion.

1.5 CLOSEOUT SUBMITTALS

A. Certificates of Release: From authorities having jurisdiction.

B. Certificate of Insurance: For continuing coverage.

C. Field Report: For pest-control inspection.

1.6 MAINTENANCE MATERIAL SUBMITTALS

A. Schedule of Maintenance Material Items: For maintenance material submittal items required by other Sections.

1.7 SUBSTANTIAL COMPLETION PROCEDURES

A. Contractor's List of Incomplete Items: Prepare and submit a list of items to be completed and corrected (Contractor's "punch list"), indicating the value of each item on the list and reasons why the Work is incomplete.

B. Submittals Prior to Substantial Completion: Complete the following a minimum of 10 days prior to requesting inspection for determining date of Substantial Completion. List items below that are incomplete at time of request.

1. Certificates of Release: Obtain and submit releases from authorities having jurisdiction, permitting Owner unrestricted use of the Work and access to services and utilities. Include occupancy permits, operating certificates, and similar releases.
2. Submit closeout submittals specified in other Division 01 Sections, including Project Record Documents, operation and maintenance manuals, damage or settlement surveys, property surveys, and similar final record information.
3. Submit closeout submittals specified in individual Sections, including specific warranties, workmanship bonds, maintenance service agreements, final certifications, and similar documents.
4. Submit maintenance material submittals specified in individual Sections, including tools, spare parts, extra materials, and similar items, and deliver to location designated by Construction Manager. Label with manufacturer's name and model number.

    a. Schedule of Maintenance Material Items: Prepare and submit schedule of maintenance material submittal items, including name and quantity of each item and name and number of related Specification Section. Obtain Construction Manager's signature for receipt of submittals.

5. Submit testing, adjusting, and balancing records.

6. Submit changeover information related to Owner's occupancy, use, operation, and maintenance.

C. Procedures Prior to Substantial Completion: Complete the following a minimum of [10] days prior to requesting inspection for determining date of Substantial Completion. List items below that are incomplete at time of request.

1. Advise Owner of pending insurance changeover requirements.
2. Make final changeover of permanent locks and deliver keys to Owner. Advise Owner's personnel of changeover in security provisions.
3. Complete startup and testing of systems and equipment.
4. Perform preventive maintenance on equipment used prior to Substantial Completion.
5. Instruct Owner's personnel in operation, adjustment, and maintenance of products, equipment, and systems. Submit demonstration and training video recordings specified in Section 017900 "Demonstration and Training."
6. Advise Owner of changeover in utility services.
7. Participate with Owner in conducting inspection and walkthrough with local emergency responders.
8. Terminate and remove temporary facilities from Project site, along with mockups, construction tools, and similar elements.
9. Complete final cleaning requirements.
10. Touch up paint and otherwise repair and restore marred exposed finishes to eliminate visual defects.

D. Inspection: Submit a written request for inspection to determine Substantial Completion a minimum of [10] days prior to date the Work will be completed and ready for final inspection and tests. On receipt of request, Architect and Construction Manager will either proceed with inspection or notify Contractor of unfulfilled requirements. Architect will prepare the Certificate of Substantial Completion after inspection or will notify Contractor of items, either on Contractor's list or additional items identified by Architect, that must be completed or corrected before certificate will be issued.

1. Request reinspection when the Work identified in previous inspections as incomplete is completed or corrected.
2. Results of completed inspection will form the basis of requirements for Final Completion.

1.8 FINAL COMPLETION PROCEDURES

A. Submittals Prior to Final Completion: Before requesting final inspection for determining Final Completion, complete the following:

1. Submit a final Application for Payment
2. Certified List of Incomplete Items: Submit certified copy of Architect's Substantial Completion inspection list of items to be completed or corrected (punch list), endorsed and dated by Architect. Certified copy of the list shall state that each item has been completed or otherwise resolved for acceptance.
3. Certificate of Insurance: Submit evidence of final, continuing insurance coverage complying with insurance requirements.
4. Submit pest-control final inspection report.
5. Submit Final Completion photographic documentation.

B. Inspection: Submit a written request for final inspection to determine acceptance a minimum of 10 days prior to date the Work will be completed and ready for final inspection and tests. On receipt of request, Architect and Construction Manager will either proceed with inspection or notify Contractor of unfulfilled requirements. Architect will prepare a final Certificate for Payment after inspection or will notify Contractor of construction that must be completed or corrected before certificate will be issued.

1. Request reinspection when the Work identified in previous inspections as incomplete is completed or corrected.

1.9 LIST OF INCOMPLETE ITEMS

A. Organization of List: Include name and identification of each space and area affected by construction operations for incomplete items and items needing correction including, if necessary, areas disturbed by Contractor that are outside the limits of construction.

1. Organize list of spaces in sequential order, listed by room or space number.
2. Organize items applying to each space by major element, including categories for ceilings, individual walls, floors, equipment, and building systems.
3. Include the following information at the top of each page:

    a. Project name.
    b. Date.
    c. Name of Architect and Construction Manager.

d. Name of Contractor.
e. Page number.

4. Submit list of incomplete items in the following format:
   a. PDF Electronic File: Architect, through Construction Manager, will return annotated file.
   b. Web-Based Project Software Upload: Utilize software feature for creating and updating list of incomplete items (punch list).

1.10 SUBMITTAL OF PROJECT WARRANTIES

A. Time of Submittal: Submit written warranties on request of Architect for designated portions of the Work where warranties are indicated to commence on dates other than date of Substantial Completion, or when delay in submittal of warranties might limit Owner's rights under warranty.

B. Partial Occupancy: Submit properly executed warranties within [15] days of completion of designated portions of the Work that are completed and occupied or used by Owner during construction period by separate agreement with Contractor.

C. Organize warranty documents into an orderly sequence based on the table of contents of Project Manual.

   Warranty Electronic File: Provide warranties and bonds in PDF format. Assemble complete warranty and bond submittal package into a single electronic PDF file with bookmarks enabling navigation to each item. Provide bookmarked table of contents at beginning of document.

   1. Submit on digital media acceptable to Architect.

D. Warranties in Paper Form:

   1. Bind warranties and bonds in heavy-duty, three-ring, vinyl-covered, loose-leaf binders, thickness as necessary to accommodate contents, and sized to receive 8-1/2-by-11-inch (215-by-280-mm) paper.
   2. Provide heavy paper dividers with plastic-covered tabs for each separate warranty. Mark tab to identify the product or installation. Provide a typed description of the product or installation, including the name of the product and the name, address, and telephone number of Installer.
   3. Identify each binder on the front and spine with the typed or printed title "WARRANTIES," Project name, and name of Contractor.

E. Provide additional copies of each warranty to include in operation and maintenance manuals.

PART 2 - PRODUCTS

2.1 MATERIALS

A. Cleaning Agents: Use cleaning materials and agents recommended by manufacturer or fabricator of the surface to be cleaned. Do not use cleaning agents that are potentially hazardous to health or property or that might damage finished surfaces.

PART 3 - EXECUTION

3.1 FINAL CLEANING

A. General: Perform final cleaning. Conduct cleaning and waste-removal operations to comply with local laws and ordinances and Federal and local environmental and antipollution regulations.

B. Cleaning: Employ experienced workers or professional cleaners for final cleaning. Clean each surface or unit to condition expected in an average commercial building cleaning and maintenance program. Comply with manufacturer's written instructions.

1. Complete the following cleaning operations before requesting inspection for certification of Final Completion for entire Project or for a designated portion of Project:

    a. Clean Project site of rubbish, waste material, litter, and other foreign substances.
    b. Sweep paved areas broom clean. Remove petrochemical spills, stains, and other foreign deposits.
    c. Rake grounds that are not planted, mulched, or paved to a smooth, even-textured surface.
    d. Remove tools, construction equipment, machinery, and surplus material from Project site.
    e. Remove snow and ice to provide safe access to building.
    f. Clean exposed exterior and interior hard-surfaced finishes to a dirt-free condition, free of stains, films, and similar foreign substances. Avoid disturbing natural weathering of exterior surfaces. Restore reflective surfaces to their original condition.

g. Remove debris and surface dust from limited-access spaces, including roofs, plenums, shafts, trenches, equipment vaults, manholes, attics, and similar spaces.
h. Clean flooring, removing debris, dirt, and staining; clean according to manufacturer's recommendations.
i. Vacuum and mop concrete.
j. Vacuum carpet and similar soft surfaces, removing debris and excess nap; clean according to manufacturer's recommendations if visible soil or stains remain.
k. Clean transparent materials, including mirrors and glass in doors and windows. Remove glazing compounds and other noticeable, vision-obscuring materials. Polish mirrors and glass, taking care not to scratch surfaces.
l. Remove labels that are not permanent.
m. Wipe surfaces of mechanical and electrical equipment and similar equipment. Remove excess lubrication, paint and mortar droppings, and other foreign substances.
n. Clean plumbing fixtures to a sanitary condition, free of stains, including stains resulting from water exposure.
o. Replace disposable air filters and clean permanent air filters. Clean exposed surfaces of diffusers, registers, and grills.
p. Clean ducts, blowers, and coils if units were operated without filters during construction or that display contamination with particulate matter on inspection.

    1) Clean HVAC system in compliance with NADCA ACR. Provide written report on completion of cleaning.

q. Clean luminaires, lamps, globes, and reflectors to function with full efficiency.
r. Clean strainers.
s. Leave Project clean and ready for occupancy.

C. Pest Control: Comply with pest control requirements in Section 015000 "Temporary Facilities and Controls." Prepare written report.

D. Construction Waste Disposal: Comply with waste-disposal requirements in Section 015000 "Temporary Facilities and Controls."

3.2 REPAIR OF THE WORK

A. Complete repair and restoration operations before requesting inspection for determination of Substantial Completion.

END OF SECTION 017700

SECTION 11 68 33

TENNIS COURT EQUIPMENT

PART 1 - GENERAL

1.1 RELATED DOCUMENTS

A. Drawings and general provisions of the Contract, including General and Supplementary Conditions and Division 01 Specification Sections, apply to this Section.

1.2 SUMMARY

A. Section includes baseball field equipment as follows:
   1. Tennis Court Net System
   2. Pickleball Court Net System

1.3 REFERENCES

A. Comply with applicable requirements of the following standards:
   1. National Collegiate Athletic Association (NCAA).
   2. American Sports Builders Association (ASBA).
   3. Manufacturers Data and Recommended Installation Requirements.

1.4 ACTION SUBMITTALS

A. Product Data: For each type of product.

B. Shop Drawings: For each type of tennis field equipment.
   1. Include plans, elevations, sections, and attachment details.
   2. Provide drawings of the manufacturer's recommended installation requirements.

C. Samples for Verification: For each type of exposed finish on the following products:
   1. Include Samples of accessories to verify color and finish selection.
   2. Molded Plastic/Rubber/Turf Options: Minimum 3 inches (76 mm) square.

1.5 INFORMATIONAL SUBMITTALS

A. Product Certificates: For each type of tennis court equipment.

B. Field quality-control reports.

C. Sample Warranty: For manufacturer's special warranties.

1.6 CLOSEOUT SUBMITTALS

A. Maintenance Data: For tennis equipment and finishes to include in maintenance manuals.

1.7 QUALITY ASSURANCE

A. Manufacturer Qualifications: A firm whose tennis court equipment components have been certified by third-party product certification service.

1.8 WARRANTY

A. Special Warranty: Manufacturer agrees to repair or replace components of tennis field equipment that fail in materials or workmanship within specified warranty period.
   1. Failures include, but are not limited to, the following:
      a. Structural failures.
      b. Deterioration of metals, metal finishes, and other materials beyond normal weathering and use.
   2. Warranty Period: Five years from date of Substantial Completion.
   3. Bleachers: One year from defect in materials and workmanship on total structure. Five years on planks due to exposure to weather conditions or UV rays.

PART 2 - PRODUCTS

2.1 TENNIS COURT EQUIPMENT

A. Tennis Court Net System:
   1. Basis-of-Design Product: Subject to compliance with requirements, provide "Douglas Premier XS Tennis Net Posts 2-7/8"" as manufactured by Tennis Court Supply. Product to include Douglas Center Tie-Down Anchor, Douglas TN-30 Tournament Tennis Net and Douglas Classic Adjustable Center Strap. Comparable product/system as approved by Architect to be considered
   2. Construction: Install net post as directed in drawing details. Net to be stretched out across the court and installed following manufacturer's guidelines
   3. Color: Black.

B. Pickleball Court Net System:

1. Basis-of-Design Product: Subject to compliance with requirements, provide "Douglas 2-7/8" Premier XS Pickleball Net Posts" as manufactured by Tennis Court Supply. Product to include Douglas Center Tie-Down Anchor, Douglas 36" Pickleball Net and Douglas Deluxe Adjustable Center Strap. Comparable product/system as approved by Architect to be considered
2. Construction: Install net post as directed in drawing details. Net to be stretched out across the court and installed following manufacturer's guidelines
3. Color: Black.

PART 3 - EXECUTION

3.1 EXAMINATION

A. Examine substrates, areas, and conditions, with Installer present, for compliance with requirements for earthwork, subgrade elevations, surface and subgrade drainage, and other conditions affecting performance of the Work.

B. Proceed with installation only after unsatisfactory conditions have been corrected.

3.2 INSTALLATION

A. Comply with manufacturer's written installation instructions for each equipment type unless more stringent requirements are indicated. Install tennis court equipment securely, positioned at locations and elevations indicated.

END OF SECTION 116833

SECTION 31 10 00

SITE CLEARING

PART 1 - GENERAL

1.01 RELATED DOCUMENTS

A. Drawings and general provisions of the Contract, including General and Supplementary Conditions and Division 01 Specification Sections, apply to this Section, including but not limited to - the following.

1. Document 31 22 01 FIELD GRADING: Requirements for earth moving and filling operations

B. Geotechnical Report by Materials Testing Consultants dated July 5, 2022.

C. Topographic Survey provided by Spalding DeDecker dated October 6, 2022.

1.02 SUMMARY

A. Section Includes:

1. Protecting existing vegetation to remain.

2. Removing existing vegetation.

3. Clearing and grubbing.

4. Stripping and stockpiling topsoil.

5. Removing above- and below-grade site improvements.

6. Disconnecting, capping or sealing, and removing site utilities and/or abandoning site utilities in place.

1.03 DEFINITIONS

A. Subsoil: All soil beneath the topsoil layer of the soil profile, and typified by the lack of organic matter and soil organisms.

B. Surface Soil: Soil that is present at the top layer of the existing soil profile at the Project site. In undisturbed areas, the surface soil is typically topsoil; but in disturbed areas such as urban environments, the surface soil can be subsoil.

C. Topsoil: Top layer of the soil profile consisting of existing native surface topsoil or existing in-place surface soil and is the zone where plant roots grow.

D. Vegetation: Trees, shrubs, groundcovers, grass, and other plants.

1.04 MATERIAL OWNERSHIP

A. Except for stripped topsoil and other materials indicated to be stockpiled or otherwise remain Owner's property, cleared materials shall become Contractor's property and shall be removed from Project site.

1.05 SUBMITTALS

A. Existing Conditions: Documentation of existing trees and plantings, adjoining construction, and site improvements that establishes preconstruction conditions that might be misconstrued as damage caused by site clearing.

1. Use sufficiently detailed photographs or videotape.

2. Include plans and notations to indicate specific wounds and damage conditions of each tree or other plants designated to remain.

B. Record Drawings: Identifying and accurately showing locations of capped utilities and other subsurface structural, electrical, and mechanical conditions.

1.06 PROJECT CONDITIONS

A. Traffic: Minimize interference with adjoining roads, streets, walks, and other adjacent occupied or used facilities during site-clearing operations.

1. Do not close or obstruct streets, walks, or other adjacent occupied or used facilities without permission from Owner and authorities having jurisdiction.

2. Provide alternate routes around closed or obstructed traffic ways if required by Owner or authorities having jurisdiction.

B. Improvements on Adjoining Property: Authority for performing site clearing indicated on property adjoining Owner's property will be obtained by Owner before award of Contract.

1. Do not proceed with work on adjoining property until directed by Architect.

C. Utility Locator Service: Notify MissDIG at 1-800-482-7171 or 8-1-1 for area where Project is located before site clearing.

D. Do not commence site clearing operations until temporary erosion and sedimentation-control measures are in place.

PART 2 - PRODUCTS

2.01 MATERIALS

A. Satisfactory Soil Material: Requirements for satisfactory soil material are specified in Division 31 Section 31 22 01 "FIELD GRADING."

1. Obtain approved borrow soil material off-site when satisfactory soil material is not available on-site.

PART 3 - EXECUTION

3.01 PREPARATION

A. Protect and maintain benchmarks and survey control points from disturbance during construction.

B. Protect existing site improvements to remain from damage during construction.

1. Restore damaged improvements to their original condition, as acceptable to Owner.

3.02 EXISTING UTILITIES

A. Locate, identify, disconnect, and seal or cap utilities indicated to be removed.

1. Arrange with utility companies to shut off indicated utilities.

B. Locate, identify, and disconnect utilities indicated to be abandoned in place.

C. Interrupting Existing Utilities: Do not interrupt utilities serving facilities occupied by Owner or others unless permitted under the following conditions and then only after arranging to provide temporary utility services according to requirements indicated:

1. Revise subparagraphs below to suit Project. Change "Architect" to "Owner" or other responsible party if required.

2. Notify Owner not less than three days in advance of proposed utility interruptions.

3. Do not proceed with utility interruptions without Owner's written permission.

D. Excavate for and remove underground utilities indicated to be removed.

3.03 CLEARING AND GRUBBING

A. Remove obstructions, trees, shrubs, and other vegetation to permit installation of new construction.

1. Do not remove trees, shrubs, and other vegetation indicated to remain or to be relocated.

2. Grind down stumps and remove roots, obstructions, and debris to a depth of 18 inches below exposed subgrade.

3. Use only hand methods for grubbing within protection zones.

4. Chip removed tree branches and dispose of off-site.

B. Fill depressions caused by clearing and grubbing operations with satisfactory soil material unless further excavation or earthwork is indicated.

3.04 TOPSOIL STRIPPING

A. Remove sod and grass before stripping topsoil.

B. Strip topsoil in a manner to prevent intermingling with underlying subsoil or other waste materials.

1. Remove subsoil and nonsoil materials from topsoil, including clay lumps, gravel, and other objects more than 2 inches in diameter; trash, debris, weeds, roots, and other waste materials.

2. Refer to section 32 92 00 TURF GRASSES for topsoil processing requirements, if applicable.

3.05 SITE IMPROVEMENTS

A. Remove existing above- and below-grade improvements as indicated on drawings and necessary to facilitate new construction.

B. Remove slabs, paving, curbs, gutters, and aggregate base as indicated.

1. Unless existing full-depth joints coincide with line of demolition, neatly saw-cut along line of existing pavement to remain before removing adjacent existing pavement. Saw-cut faces vertically.

2. Paint cut ends of steel reinforcement in concrete to remain with two coats of antirust coating, following coating manufacturer's written instructions. Keep paint off surfaces that will remain exposed.

3.06 DISPOSAL OF SURPLUS AND WASTE MATERIALS

A. Remove surplus soil material, unsuitable topsoil, obstructions, demolished materials, and waste materials including trash and debris, and legally dispose of them off Owner's property.

END OF SECTION 311000

SECTION 31 22 01

FIELD GRADING

PART 1 – GENERAL

1.1 Related Documents

A. Drawings and general provisions of the Contract, including General and Supplementary Conditions and Division 1 Specification Sections, apply to this Section.

1.2 SUMMARY

A. Section Includes:

1. Removal of topsoil and stockpiling for later reuse and removal of excess from the Site.
2. Removal of subsoil and stockpiling for later reuse and removal of excess from the Site.
3. Grading and fill operations for the Site.
4. Finish grading with topsoil to proposed contours.

B. Related Sections:

1. SECTION 312333 – TRENCHING AND BACKFILLING: Excavation and backfilling for utilities.

1.3 REFERENCES

A. ASTM International:

1. Standard Test Method for Sieve Analysis of Fine and Coarse Aggregates (ASTM C-136-96a).

2. Standard Test Methods for Laboratory Compaction Characteristics of Soil Using Standard Effort (12,400 ft-1bf/ft^3 (600 kN-m/m^3)) (ASTM D-698-00a).
3. Standard Test Method for Density and Unit Weight of Soil in Place by the Sand-Cone Method (ASTM D-1556-00).
4. Standard Test Methods for Laboratory Compaction Characteristics of Soil Using Modified Effort (56,000 lb-lbf/ft^3 (2,700 kN-m/m^3)) (ASTM D-1557-00).
5. Standard Practice for Classification of Soils for Engineering Purposes (Unified Soil Classification System) (ASTM D-2487-00).
6. Standard Test Methods for Density of Soil and Soil-Aggregate in Place by Nuclear Methods (Shallow Depth) (ASTM D-2922-96^{e1}).
7. Standard Test Method for Water Content of Soil and Rock in Place by Nuclear Methods (Shallow Depth) (ASTM D-3017-96^{e1}).
8. Standard Test Methods for Minimum Index Density and Unit Weight of Soils and Calculation of Relative Density (ASTM D-4254-00).

1.4 SUBMITTALS

A. Quality Control Submittals (Test Reports): Submit the following in accordance with the GENERAL REQUIREMENTS:
   1. Field density test reports.
   2. Report of actual unconfined compressive strength and/or results of bearing tests of each stratum tested.
B. Contract Closeout Submittals (Project Record Documents): Accurately record horizontal dimensions, elevations or inverts, and slope gradients of the following:
   1. Utilities to remain in place.
   2. Rerouted utilities.
   3. New utilities.

1.5 PROJECT CONDITIONS

A. Existing Conditions: For reference only, a topographic survey of the Site has been included on the Drawings.

PART 2 – PRODUCTS

2.1 MATERIALS

A. Existing Topsoil: Natural, fertile agricultural soil capable of sustaining vigorous plant growth, not in frozen or muddy condition, containing not less than six percent organic matter, and corrected to pH value of 5.5 to 7.5. Free from subsoil, slag, clay, stones, lumps, live plants, roots, sticks, crabgrass, couchgrass, noxious weeds, and foreign matter.
B. Subsoil: Excavated material, graded free of lumps larger than 4 inches, rocks larger than 2 inches.
C. Structural Fill: Fill materials required to achieve design grades underneath field areas shall be composed of the following characteristics.
   1. USCS Classification: SP, SP-SM, or SP-SC.
   2. Fines Content: < 12 %
   3. Maximum Particle Size: 2 inches diameter
   4. Organic Content: < 5%

2.2 SOURCE QUALTIY CONTROL

A. Perform test and analysis of fill materials per ASTM D-698 for cohesive materials and ASTM D-4254 for cohesionless soils and in accordance with DIVISION 1 – GENERAL REQUIREMENTS.

PART 3 – EXECUTION

3.1 EXAMINATION

A. Inspect the Site and verify as to actual grades and levels, and the true conditions under which the work is to be performed.

3.2 PREPARATION

A. Locate and verify all underground utilities.
B. Contact MissDig (811 or 1-800-482-7171 at least 72 hours before digging.
   1. Notify owners of underground utilities who are not current members of MissDig three (3) working days in advance.
C. Protection:
   1. Protect trees, shrubs, lawns and other features remaining as portion of final landscaping.
   2. Protect benchmarks, existing structures, fences, roads, sidewalks, paving and curbs from equipment and vehicular traffic.
   3. Maintain and protect utilities that pass through work area and are indicated to remain:
      a. Identify and flag aerial and surface utilities.
      b. Identify known underground utilities. Stake and flag locations.
      c. Where unmarked utilities are uncovered within the work area, notify the Engineer and the authorities having jurisdiction (AHJ), and take precautions to prevent interruption of service. Should such lines or services be damaged, broken, or interrupted through negligence, repair and restore immediately without additional cost to utility owner.
   4. Repair damage caused by the Work of this Section.
   5. Identify required lines, levels, contours, and datum.
   6. Notify utility company when removing and/or relocating existing utilities.
   7. If conditions are encountered that are different than those indicated on the Drawings, notify the Engineer and discontinue affected work in area until notified to resume work.

3.3 CONSTRUCTION

A. Topsoil Stripping:

1. Prior to mass earthwork excavation, strip all topsoil from areas which will receive paving, walks, synthetic turf systems or other impervious surfacing. Remove topsoil, vegetation, roots, soft, organic, frozen, or unsuitable soils in the construction area.
2. Stockpile topsoil in storage piles where directed by the Owner/Site Civil Engineer. Construct storage piles to freely drain surface water. Cover storage piles if required to prevent wind-blown dust.
3. Dispose of topsoil in excess of that needed for finish grading off the Site.

B. Subgrade Compaction and Proof Rolling:
1. Prior to fill and grading operations, the contractor shall scarify and compact the subgrade in field areas to at least 98% of the materials' standard proctor maximum dry density, in general accordance with ASTM procedures, to a depth of at least twelve inches below the surface and then proof-rolled with a loaded tandem axle dump truck or similar heavy rubber tired vehicle.
2. Subgrade compaction should be compacted and/or stabilized before proof rolling operations.
3. Proof-rolling operations shall be performed under a period of dry-weather and be witnessed by a representative of the geotechnical engineer of record.
   a. Soils that are observed to rut or deflect excessively (>1") under the moving load should be undercut and replaced with properly compacted low plasticity fill material.

C. Rough Grading:
1. Set all required grading stakes. Check and verify correctness.
2. Perform all exterior cut, fill, backfill and grading as required to conform to existing contours and elevations on the Drawings. Hold rough grades below finish grades as follows:
   a. Areas to receive Natural and Synthetic Playing Systems: To bottom of proposed base layer.

3. Dispose excavated material in excess of that needed for fill off the Site or as directed by the Owner/Site Civil Engineer. Provide additional fill equivalent to that obtained on the Site and which meets specified material. Install in layers not exceeding 6 inches or of a thickness determined by the testing service as required to achieve proper compaction and moisten only to obtain the specified degree of compaction.

D. Pavement Subbase Course:
   1. General: Subbase course consists of placing subbase material, in layers of specified thickness, over subgrade to support a pavement base course.
   2. Grade Control: During construction, maintain lines and grades including crown and cross-slope of subbase course.
   3. Shoulders: Place shoulders along edges of subbase course to prevent lateral movement. Construct shoulders of acceptable soil materials, placed in such quantity to compact to thickness of each subbase course layer. Compact and roll at least a 12-inch width of shoulder simultaneously with compacting and rolling of each layer of subbase course.
   4. Placing: Place subbase course material on prepared subgrade in layers of uniform thickness, conforming to indicated cross-section and thickness. Maintain optimum moisture content for compacting subbase material during placement operations.
   5. When a compacted subbase course is indicated to be 6 inches thick or less, place material in a single layer. When shown to be more than 6 inches thick, place material in equal layers, except no single layer more than 6 inches or less than 3 inches in thickness when compacted.

E. Fill Operations and Compaction:
   1. Structural fill materials to be placed in maximum loose lifts of 4 to 6 inches when hand-guided compacted equipment, and maximum loose lifts and compacted to the requirements listed below.

2. Compact soil to not less than the following percentages of maximum density for soils that exhibit a well-defined moisture density relationship (cohesive soils) determined per ASTM D-698; and not less than the following percentages of relative density, determined per ASTM D-4254 for soils that will not exhibit a well-defined moisture-density relationship (cohesionless soils):
    a. Existing Court's Aggregate Base: 98 percent of the materials' standard Proctor maximum dry density.

F. Shaping:
1. After grading is completed, drag and float surface to remove ridges, depressions, and other irregularities.
2. Rake out and remove all roots, debris and stones larger than 1 1/2 inches.

G. Site Tolerances:
1. Perform earthwork operations to establish required elevations and dimensions within the following tolerances at points taken on a grid of the specified dimensions. Results that rely on average values will be grounds for rejection of the installation.
    a. Exception: No tolerance will be permitted that would allow:
        1) A lesser size than indicated for footings and foundations.
        2) A lesser thickness than indicated for:
            a) Paving
            b) Paving base course.
            c) Concrete floor slabs-on-grade.

H. Dewatering:
1. Prevent surface water and subsurface or groundwater from flowing into excavations and from flooding the Site and the surrounding areas.
2. Do not allow water to accumulate in excavations. Remove water to prevent soil changes detrimental to stability of subgrades. Provide and maintain pumps, well points, sumps, suction and discharge lines, and other dewatering system components necessary to convey water away from excavations.

3. Establish and maintain temporary drainage ditches and other diversions outside excavation limits to convey rainwater and water removed from excavations to collecting or run-off areas. Do not use trench excavations as temporary drainage ditches.

3.4 FIELD QUALITY CONTROL

A. The Contractor shall employ and pay for soil testing and inspection service for quality control testing during earthwork operations in accordance with DIVISION 1 – GENERAL REQUIREMENTS. Allow testing service to inspect and approve subgrades and fill layers before further construction work is performed.
   1. Testing frequency of Standard Proctor, Minimum % Dry Density, and Placement Moisture Content Range shall be performed in the following intervals.
      a. Structural Fill (Granular): 1 per 5,000 sqft of fill placed/lift
      b. Utility Trench Backfilling: 1 per 150 linear foot/lift
B. If tests indicate work does not meet specified requirements, remove work, replace and re-test at no additional cost to the Owner.

3.5 ADJUSTING

A. Repair and re-establish grades in settled, eroded, or rutted areas:
   1. Where completed compacted areas are disturbed by subsequent construction operations or adverse weather, remove and replace or scarify soil materials, reshape, and re-compact to specified density prior to further construction.
   2. Where settling is measurable or observable at excavated areas during general warranty period for the Project, remove surface (lawn, or other finish), add backfill material, compact, and replace surface treatment. Restore appearance, quality, and condition of surface or finish to match adjacent work, and eliminate evidence of restoration to greatest extent possible.

3.6 PROTECTION

A. Protect graded areas from traffic and erosion.

END OF SECTION 31 22 01

SECTION 31 23 33

TRENCHING AND BACKFILL

PART 1 - GENERAL

1.01 RELATED DOCUMENTS

A. Drawings and general provisions of the Contract, including General and Supplementary Conditions and Division 01 Specification Sections, apply to this Section, including but not limited to - the following.

1. Document 31 22 01 – FIELD GRADING
2. Document 33 40 00 – STORM UTILITY DRAINAGE UTILITIES
3. Trench excavation width and safety.
4. Backfill materials and placement for underground utilities.
5. Utility identification using marking tape and trace wire.

1.02 SUMMARY

A. Section Includes:

1. Trench excavation width and safety.
2. Backfill materials and placement for underground utilities.
3. Utility identification using marking tape and trace wire.

1.03 REFERENCES

A. American Public Works Association (APWA):

1. Public Works Management Practices Manual; latest edition.

B. ASTM International (ASTM):

1. C33: Specification for Concrete Aggregates.
2. C150: Standard Specification for Portland Cement.
3. C618: Standard Specification for Coal Fly Ash and Raw or Calcined Natural Pozzolan for Use in Concrete.

4. D75: Standard Practice for Sampling Aggregates.

5. D421: Practice for Dry Preparation of Soil Samples for Particle Size Analysis and Determination of Soil Constants.

6. D422: Test Method for Particle-Size Analysis of Soils.

7. D698: Standard Test Methods for Laboratory Compaction Characteristics of Soil Using Standard Effort (12 400 ft-lbf/ft3 (600 kN-m/m3)).

8. D1556: Test Method for Density and Unit Weight of Soil in Place by the Sand-Cone Method.

9. D1557: Test Method for Laboratory Compaction Characteristics of Soil Using Modified Effort (56,000 ft-lb/ft3 (600 kN-m/m3)).

10. D2167: Test Method for Density and Unit Weight of Soil in Place by the Rubber Balloon Method.

11. D2321: Standard Practice for Underground Installation of Thermoplastic Pipe for Sewers and Other Gravity-Flow Applications.

12. D2419: Standard Test Method for Sand Equivalent Value of Soils and Fine Aggregate.

13. D2434: Standard Test Method for Permeability of Granular Soils (Constant Head).

14. D2487: Standard Practice for Classification of Soils for Engineering Purposes (Unified Soil Classification System).

15. D2488: Standard Practice for Description and Identification of Soils (Visual-Manual Procedure).

16. D2940/D2940M: Standard Specification for Graded Aggregate Material For Bases or Subbases for Highways or Airports.

17. D4318: Test Method for Liquid Limit, Plastic Limit and Plasticity Index of Soils.

18. D4832: Standard Test Method for Preparation and Testing of Controlled Low Strength Material (CLSM) Test Cylinders.

19. D6938: Standard Test Method for In-Place Density and Water Content of Soil and Soil-Aggregate by Nuclear Methods (Shallow Depth).

C. Occupational Safety and Health Administration (OSHA) Standards and Regulations:

1. 29 CFR 1926, Subpart P: Safety and Health Regulations for Construction, Excavations.

1.04 CLASSIFICATION OF EXCAVATION

A. As specified in Section 31 20 01 – FIELD GRADING

1.05 DEFINITIONS

A. Percent Compaction or Compaction Density: The field dry density of compacted material, expressed as a percentage of the maximum dry density.

B. Field Dry Density or Field Density: In-place density as determined by ASTM D1556 (Sand Cone Method), ASTM D2167 (Rubber Balloon Method), or ASTM D6938 (Nuclear Method).

C. Maximum Dry Density: Laboratory density as determined by ASTM D698 (Standard Proctor) and occurring at the optimum moisture content of the soil being tested.

D. Pipe Embedment: Comprised of the following or combination thereof:

1. Foundation: Required only when the native trench bottom does not provide a firm working platform or the necessary uniform and stable support for the installed pipe.

2. Bedding: Placed directly underneath the pipe and brings the trench bottom to grade. Provides a firm, stable, and uniform support of the pipe.

3. Haunching: From bottom of pipe to springline.

4. Initial Backfill: From top of bedding or foundation to six inches above top of pipe, unless noted otherwise.

5. Final Backfill: Above the initial backfill to the original or finish grade.

6. Backfill: Includes initial and final backfill.

1.06 SUBMITTALS

A. Submit in accordance with Section 01 33 00, Submittals.

B. Materials Sources: Name of source, location, date of sample, sieve analysis, and laboratory compaction characteristics.

1.07 QUALITY ASSURANCE

A. Comply with the requirements specified in Section 01 43 00, Quality Requirements, an

B. Responsibilities by CONTRACTOR:

1. The CONTRACTOR shall compact backfill material in accordance with the specifications.

C. Responsibilities of Owner:

1. The Owner shall provide quality control acceptance field testing services of compacted backfill material, unless noted otherwise.

2. The Owner's representative will take tests along backfilled area if compaction tests indicate a failure to meet the specified compaction requirements.

1.08 DELIVERY STORAGE AND HANDLING

A. Provide geotextile fabric meeting the following requirements, 3.5oz/y nonwoven, needlepunched PP fabric; 90lbs tensile strength, 185psi Mullen burst, 60lb puncture, 40lb trapezoidal tear.

B. Protect geotextile fabric from sunlight during transportation and storage. Do not leave geotextile fabric exposed to sunlight for more than five days during installation operations.

1.09 SITE CONDITIONS

A. A Geotechnical Data Report was prepared for this Project and is provided with the Contract Documents.

PART 2 - PRODUCTS

2.01 BACKFILL MATERIALS

A. Materials as specified in Section 31 22 01 - FIELD GRADING, and indicated on Contract Drawings.

2.02 EQUIPMENT

A. Compaction equipment shall be capable of consistently achieving the specified compaction requirements without damaging pipes.

2.03 UTILITY IDENTIFICATION

A. Trace Wire: Continuous, single-strand copper wire, insulated, maximum 10 AWG. Clear plastic covering, imprinted with inscription describing specific utility in large letters.

B. Marking Tape: Use type specifically manufactured for marking and locating underground utilities. Acid- and alkali-resistant polyethylene film, six inches wide with minimum thickness of 0.004 inch, minimum strength of 1,750 psi lengthwise and 1,500 psi crosswise. Provide tape manufactured with foil core at least 0.35-mil thick to enable detection by metal detection when tape is buried up to three feet deep. Tape shall bear continuous printed inscription describing specific utility. Tape shall be installed 12 inches below finished grade. Tape color shall be as follows:

1. Electric conduits, duct banks, and cable: Red.

2. Potable water systems: Blue.

3. Non-potable water (NPW) systems: Purple.

4. Gas, oil, dangerous materials: Yellow.

5. Telephone, Fiber Optic, CCTW, fire communications: Orange.

6. Sanitary sewer systems: Green.

PART 3 - EXECUTION

3.01 EXAMINATION

A. As specified in Section 31 20 01 - FIELD GRADING.

3.02 PREPARATION

A. As specified in Section 31 20 01 – FIELD GRADING

3.03 PROTECTION OF IN-PLACE CONDITIONS

A. As specified in Section 31 20 01 – FIELD GRADING.

3.04 RESTORATION

A. As specified in Section 31 20 01 – FIELD GRADING.

3.05 TRENCH EXCAVATION

A. Preserve material below and beyond the lines of excavations.

B. Locate stockpiled excavated material at least three feet from edge of excavations and prevent cave-ins or bank slides.

C. Remove rock to the greater of six inches seal if required, and backfill with bedding material.

D. Refer to Section 31 20 01 – FIELD GRADING, for additional requirements.

3.06 UNAUTHORIZED EXCAVATION

A. CONTRACTOR is responsible for backfilling unauthorized excavations.

B. Unauthorized excavations which extend to and expose rock will be sealed with at least six inches of CLSM, concrete, or sprayed with bitumen within eight hours of exposure. If sealing is delayed more than eight hours, over excavate at least six inches below the excavation bottom to expose fresh rock and seal within eight hours.

C. Remaining extent of unauthorized excavation will be filled with bedding material.

3.07 BACKFILL

A. Contractor responsible for obtaining all inspections and approvals.

B. All trenches and excavations shall be backfilled as soon as practicable after the pipe has been installed unless other protection of the pipe is directed or shown on the plans.

C. The backfill around the pipe up to the top of the pipe shall be placed in loose layers not exceeding six inches per layer and thoroughly compacted by hand or power tampers approved by the OWNER. Great care shall be used to obtain thorough compaction under the haunches and along the sides of the pipe. Over the top of the pipe, backfill layers of approximately eight inch depth shall be added with each layer compacted separately and thoroughly until the trench is completely and uniformly filled to a depth of two feet above the top of the pipe. Backfilling operations shall be done in such a manner as to avoid movement or damage to the pipe.

D. Backfill material shall be brought up evenly by depositing the material in layers approximately nine inches in loose depth and without injuring the pipe by shock, jar or excessive free fall. Each layer shall be thoroughly compacted by power tampers operated with care so as not to injure the underlying pipe or appurtenances. Hand tampers may be used in corners or narrow places inaccessible to power tampers. If compaction is done using hydraulically-operated backhoe-mounted compactors with minimum rated impulse force of 6,400 pounds with a minimum of 2,000 cycles per minute, the backfill material may be deposited in layers not more than two feet in loose depth. Layers in excess of two feet may be deposited only if tests, conducted at the CONTRACTOR's expense, show, to the satisfaction of the OWNER, that the specified degree of compaction is being achieved. There shall be at least three feet of compacted backfill over the pipe before this method of compaction may be employed.

E. Backfilling shall be kept completed up to a point within 100 feet of the end of the newly laid pipe unless otherwise directed by the OWNER. During backfilling operations, no sheeting or bracing shall be removed without permission of the OWNER.

F. Fill to lines and grades necessary to provide finish grades.

G. Use a placement method that does not disturb or damage other work or existing features.

H. Maintain fill materials within two percent of optimum moisture, to attain required compaction density.

I. Place and compact material in equal continuous layers.

J. Maximum compacted depth is six inches for aggregate materials and eight inches for soil materials, unless noted otherwise.

3.08 COMPACTION

A. As specified in Section 31 20 01 – FIELD GRADING.

3.09 UTILITY IDENTIFICATION

A. Install marking tape over all site utilities, 12 inches below finish grade or as indicated on Contract Drawings.

B. Install trace wire at top center of marking tape; pull wire taut to remove slack.

C. Extend trace wire to utility boxes, manholes and junctions to allow for connection to subsurface location equipment.

3.10 FIELD QUALITY CONTROL AND QUALITY ASSURANCE

A. General

1. The OWNER shall perform field quality control tests separate from acceptance testing. CONTRACTOR test results will not be used by the OWNER for acceptance.

2. The Owner will perform field density testing for quality assurance testing in accordance with ASTM D1556, ASTM D2167, or ASTM D6938. Acceptance of compaction will be in accordance with City's test only.

3. Compaction shall be deemed to comply with the specifications when no more than one test of any three consecutive tests performed by the City falls below the specified relative compaction. The one test shall be no more than three percentage points below the specified compaction. The CONTRACTOR shall pay the costs for any retesting or additional testing of work not conforming to these Specifications.

4. Where compaction tests indicate a failure to meet the specified compaction, the City will take additional tests in each direction until the extent of the failing area is identified. Rework the entire failed area until the specified compaction has been achieved.

B. Compaction:

1. Material shall be placed and compacted in layers until the density is not less than the percentage of maximum dry density indicated in Table 31 23 33-1 determined by ASTM D698 or other approved method.

Table 31 23 33-1	
Max Lab Dry Wt. (lbs/ft^3)	Min Compaction Requirements (% Lab. Max.)
90 to 104.9	100
105 to 119.9	98
120 and more	95

2. The Engineer will evaluate field density test results in relation to maximum dry density as determined by testing material in accordance with ASTM D698 (Standard Proctor).

3. Location of field density tests shall be determined by the OWNER.

4. Minimum frequency of City field density tests as specified in Table 31 23 33-2.

Table 31 23 33-2	
Area	Frequency
Trench (Structural Areas)	1 per lift for every 1,000 linear feet (300 m) of trench
Trench (Non-Structural Areas)	1 per alternate lift for every 1,000 linear feet (300 m) of trench

5. Regardless of the minimum testing frequency specified, field density tests shall be performed by the CONTRACTOR in sufficient number for the CONTRACTOR's quality control purposes to ensure that specified density is obtained.

3.11 ADJUSTING

A. Shrinkage:

1. Backfill to a height above finished grade which will allow for the shrinkage or consolidation of material. Initially, provide at all points, an excess of at least one percent of total height of backfill measured from stripped surface to top of finished surface.

2. Supply specified materials and build up low places, without additional cost if embankment or backfilling settles to be below the indicated level for proposed finished surface at any time before final acceptance of the work.

3.12 PROTECTION

A. Formulate excavation, backfilling, and filling schedule and procedures to eliminate possibility of undermining or disturbing foundations of partially and completed structures, pipelines and embankments or existing structures and pipelines.

END OF SECTION 312333

SECTION 32 12 16

ASPHALT PAVING

PART 1 – GENERAL

1.01 Related Documents

A. Drawings and general provisions of the Contract, including General and Supplementary Conditions and Division 01 Specification Sections, apply to this Section.

1. Division 01 – General Requirements: Testing procedures.

1.02 Summary

A. The Work of this Section includes:

1. Placing and compacting aggregate base course.

2. Placing and compacting bituminous base course.

3. Priming aggregate base course and placing asphalt pavement (intermediate and surfaces courses).

1.03 REFERENCES

A. ASTM International:

1. Standard Specification for Road Tar (ASTM D-490).

2. Standard Test Methods for Laboratory Compaction Characteristics of Soil Using Standard Effort (12,400 ft-1bf/ft3 (600 kN-m/m3)) (ASTM D-698).

3. Standard Test Methods for Laboratory Compaction Characteristics of Soil Using Modified Effort (56,000 lb-lbf/ft3 (2,700 kN-m/m3)) (ASTM D-1557).

4. Standard Test Methods for Density of Soil and Soil-Aggregate in Place by Nuclear Methods (Shallow Depth) (ASTM D-6938).

5. Standard Test Method for Density of Bituminous Concrete in Place by Nuclear Methods (ASTM D-2950).

6. Standard Specification for Emulsified Coal-Tar Pitch (Mineral Colloid Type) (ASTM D-3320).

7. Standard Test Methods for Minimum Index Density and Unit Weight of Soils and Calculation of Relative Density (ASTM D-4254).

B. State of Michigan Department of Transportation (MDOT): Latest edition of Construction and Material Specifications (MDOT CMS) Specifications and standards.

C. City of Detroit: Specifications and standards details

1.04 SUBMITTALS

A. General: Submit the following per the General Requirements.

B. Informational Submittals (Test Reports): Submit field density reports.

1.05 Project Conditions

A. Environmental Requirements:

1. Do not compact or roll the subgrade or place or roll the aggregate base course during inclement or rainy weather, or when conditions are not suitable for the work involved.

2. Do not place bituminous paving when pavement surface temperature is below 50-degrees Fahrenheit, or when there is frost in the base, or any other time when weather conditions are unsuitable for the type of material being placed.

PART 2 – PRODUCTS

2.01 MATERIALS

A. Aggregate Base Course Materials: Conform to the requirements and gradation of MDOT 21AA, Aggregate Base.

B. Bituminous Tack Coat: Conform to MDOT SSC Item 904.03 Emulsified Asphalt material.

C. Bituminous Leveling Course: Conform to MDOT 13A for aggregate and bituminous material.

D. Bituminous Surface Course: Conform to MDOT 36A for aggregate and bituminous materials.

F. Seal Primer: Conform to MDOT SSC Section 503.

G. Pavement Sealer: Refined coal tar emulsion prepared from high temperature refined coal tar per ASTM D-409 (except oil and water gas tar).

1. Hot-blended rubber fortifier into refined coal tar prior to emulsification.

2. Maximum water content: 48 percent to 53 percent maximum by weight.

3. Minimum solid content: 47 percent minimum to 52 percent by weight.

4. Ash of non-volatiles: Between 30 and 40 percent.

5. Solubility of non-volatiles in CS2: Minimum of 20 percent.

PART 3 – EXECUTION

3.01 INSTALLATION

A. Base Course: Furnish, place, and construct aggregate base per MDOT 21AA as necessary.

B. Prime Coat Application: Apply bituminous prime coat on compacted scarified base course at an application rate between 0.05 and 015 gallons per square yard of surface.

C. Tack Coat Application: Apply tack coat, diluted with water at the ratio of one-to-one, at an application rate between 0.05 and 0.15 gallons for each square yard.

D. Placement of Asphalt Pavement:

1. Furnish, place, and construct asphalt pavement per MDOT 13A and 36A.

2. Place asphalt intermediate (binder) course within 24 hours of priming aggregate base course. Place surface course within twelve hours of placing and compacting intermediate (binder) course.

3. Place intermediate (binder) course to compacted depth as indicated on the Drawings. Place surface course to a compacted depth as indicated on the Drawings.

4. Furnish, place, and construct intermediate (binder) course per MDOT CMS Section 503, Table 503-1.

5. Furnish, place, and construct surface course per MDOT SSC Item 501.03.

6. Ensure joints between existing and new paving are straight, clean, vertical and free of broken or loose material. Prime vertical surfaces to ensure tight bond.

F. Tolerances:

1. Ensure surface of completed asphalt pavement is true to lines, profiles and elevations indicated, and is free from depressions exceeding 1/4 inch when measured with a 10-foot straight-edge.

2. A deviation greater than 3/8 inch will not be accepted. Measurements shall be made at three random locations with the average allowable deviation being not over 1/4 inch.

3.03 Field Quality Control

A. Provide compaction tests for each 500 square yards of prepared subgrade and for each 250 square yards of compacted aggregate base course.

B. If compaction tests indicate prepared subgrade and/or compacted aggregate base course does not meet specified requirements, remove the defective work, replace and re-test at no additional cost to the Owner.

3.04 PROTECTION

A. Do not permit vehicular traffic of any kind on paving until it has cooled and hardened, and in no case less than six hours after final rolling of bituminous paving.

END OF SECTION

SECTION 32 18 16
TENNIS COURT SURFACE

PART 1 - GENERAL

1.1 GENERAL DESCRIPTION

A. Textured acrylic surfacing for asphalt tennis courts.

B. Contractor shall verify mix design and desired speed of surface with the University and the Architect/Engineer prior to installation.

1.2 RELATED SECTIONS

A. Related Work
   1. Asphalt concrete pavement.
   2. Court marking for tennis courts.
   3. Tennis court equipment.

B. References
   1. National Asphalt Paving Association (NAPA)
   2. United States Tennis Association (USTA)
   3. International Tennis Federation (ITF)
   4. American Sport Builders Association (ASBA)

1.3 QUALITY ASSURANCE

A. Surfacing shall conform to the guidelines of the ASBA for planarity.

B. All surface coating products shall be supplied by a single manufacturer.

C. The Contractor shall record the batch number of each product used on the site and maintain it through the warranty period.

D. The Contractor shall provide the inspector, upon request, an estimate of the volume of each product to be used on the site.

E. The Contractor shall be an authorized applicator of the specified system.

F. The manufacturer's representative shall be available to help resolve material questions.

1.4 SUBMITTALS

A. Manufacturer specifications for components, color chart and installation instructions.

B. Authorized Applicator certificate from the surface system manufacturer.

C. ITF classification certificate for the system to be installed.

D. Reference list from the installer of at least 5 projects of similar scope done in each of the past 3 years.

E. Current Material Safety Data Sheets (MSDS).

F. Product substitution: If other than the product specified, the contractor shall submit at least 7 days prior to the bid date a complete type written list of proposed substitutions with sufficient data, drawings, samples and literature to demonstrate to the University's satisfaction that the proposed substitution is of equal quality and utility to that originally specified. Information must include a QUV test of at least 1000 hours illustrating the UV stability of the system. The color system shall have an ITF pace rating in Category 2. Under no circumstances will systems from multiple manufacturers be considered.

1.5 MATERIAL HANDLING AND STORAGE

A. Store materials in accordance with manufacturer specifications and MSDS.

B. Deliver product to the site in original unopened containers with proper labels attached.

C. All surfacing materials shall be nonflammable.

1.6 GUARANTEE

A. Provide a guarantee against defects in the materials and workmanship for a period of one year from the date of substantial completion.

1.7 INSTALLER QUALIFICATIONS

A. Installer shall be regularly engaged in construction and surfacing of acrylic tennis courts, play courts or similar surfaces.

B. Installer shall be an Authorized Applicator of the specified surface system.

C. Installer shall be a builder member of the ASBA.

1.8 MANUFACTURER QUALIFICATIONS

A. System manufacturer shall provide documentation that the surface to be installed has been classified by the ITF as a medium pace surface.

B. System manufacturer shall be a US owned company.

C. System manufacturer shall be a member of the ASBA.

PART 2 - PRODUCTS

2.1 MANUFACTURERS

A. Basis of Design Product: Plexipave. Acceptable manufacturers include the following:

1. Plexipave
2. DecoTurf
3. Nova Sports USA
4. Laykold

B. Substitutions: Submit requests at least 7 days prior to the bid date with a complete type written list of proposed substitutions with sufficient data, drawings, samples and literature to demonstrate to the University's satisfaction that the proposed substitution is of equal quality and utility to the specified product. Information must include a QUV test of at least 1000 hours illustrating the UV stability of the system. The system shall have an ITF pace rating in Category 2. Under no circumstance may the final color surface contain silica sand added at the job site.

2.2 MATERIALS

A. Patching Mix (California Court Patch Binder) - for use in patching cracks, holes, depressions and other surface imperfections.

B. Crack Filler (Plexipave Crack Filler) - for use in filling fine cracks.

C. Acrylic Filler Course (California Acrylic Resurfacer) – for use as a filler for new or existing asphalt surfaces. The 100% acrylic filler shall be blended with approved silica sand at the job site.

D. Acrylic Color Playing Surface (Plexichrome/Plexipave Color Base) – for use as the finish color and texture. Plexichrome and Plexipave Color Base are blended at the job site to achieve the correct surface texture. *Factory Fortified Plexipave may be used as an alternative material.

E. Line Paint (California Line Paint) – for use as the line marking on the court/play surface.

F. Clear Glo – shall be used as a sealer in heavy traffic areas

G. Water – for use in dilution/mixing shall be clean and potable.

2.3 MATERIAL SPECIFICATIONS

A. Court Patch Binder – 100% acrylic resin blended with Portland Cement and silica sand.

1. Percent solids by weight (minimum) 46%
2. Weigh8.7-8.9 lbs./gallon

B. Plexipave Crack Filler – 100% acrylic resin heavily filled with silica sand.

1. Percent solids by weight (minimum) 85%
2. Percent solids by weight (minimum) 15 lbs./gallon

C. California Acrylic Resurfacer – 100% acrylic resin (no vinyl copolymerization constituent). The product shall contain not less than 3.5% attapulgite.

1. Percent solids by weight (minimum) 26.7%

2. Weight 8.7-8.9 lbs./gallon

D. Plexichrome – 100% acrylic resin (no vinyl copolymerization constituent) with selected light fast pigments. Green shall contain not less than 8% chrome oxide.

1. Percent solids by weight (minimum) 36.5%
2. Weight 10.0-10.2 lbs./gallon

E. Plexipave Color Base – 100% acrylic resin containing no vinyl copolymerization constituent. Contains not more than 63% rounded silica sand.

1. Percent solids by weight (minimum) 74%

2. Weight 13.1-14.1 lbs/gallon

F. California Line Paint – 100% acrylic resin containing no alkyds or vinyl constituents. Texturing shall be rounded silica sand.

1. Percent solids by weight (minimum) 60.5%

2. Weight 12-12.3 lbs/gallon

G. Clear Glo – 100% clear acrylic sealer.

1. Percent solids by weight (minimum) 38.4%

2. Weight 8.7 lbs.

H. All surfacing materials shall be non-flammable and have a VOC content of not less than 100g./ltr. Measured by EPA method 24.

I. Local sands are not acceptable in the color playing surface. Sands must be incorporated at the manufacturing location to ensure quality and stability.

PART 3 - EXECUTION

3.1 WEATHER LIMITATIONS

A. Do not install when rainfall is imminent or extremely high humidity prevents drying.

B. Do not apply unless surface and air temperature are 50°F and rising.

C. Do not apply if surface temperature is in excess of 140°F.

3.2 PREPARATION FOR ACRYLIC COLOR PLAYING SYSTEM

A. Clean surfaces of loose dirt, oil, grease, leaves, and other debris in strict accordance with manufacturer's directions. Pressure washing will be necessary to adequately clean areas to be coated. Any areas previously showing algae growth shall be treated with Clorox or approved product to kill the organisms and then be properly rinsed.

B. Holes and cracks: Cracks and holes shall be cleaned and a suitable soil sterilant, as approved by the owner, shall be applied to kill all vegetation 14 days prior to use of Court Patch Binder according to manufacturer's specifications.

C. Depression: Depressions holding enough water to cover a five cent piece shall be filled with Court Patch Binder Patching Mix. 3 gallons of Court Patch Binder, 100 lbs. 60-80 silica sand, 1 gallon Dry Portland Cement (Type I). This step shall be accomplished prior to the squeegee application of Acrylic Resurfacer. The contractor shall flood all the courts and then allow draining. Define and mark all areas holding enough water to cover a nickel. After defined areas are dry, prime with tack coat mixture of 2 parts water/1 part Court Patch Binder. Allow tack coat to dry completely. Spread Court Patch Binder mix true to grade using a straight edge (never a squeegee) for strike off. Steel trowel or wood float the patch so that the texture matches the surrounding area. Never add water to mix. Light misting on surface and edges to feather in is allowed as needed to maintain workability. Allow to dry thoroughly and cure.

NO WORK FROM THIS STAGE ON SHALL COMMENCE UNTIL THE UNIVERSITY AND THE ARCHITECT/ENGINEER HAS ACCEPTED THE SURFACE.

D. Filler Course. (Acrylic Resurfacer): Filler course shall be applied to the clean

underlying surface in one application to obtain a total quantity of not less than .06 gallon per square yard based on the material prior to any dilution. Acrylic Resurfacer may be used to pre-coat depression and crack/hole repairs to achieve better planarity prior to filler course application.

1. Over a properly repaired surface of asphalt on existing courts, apply one coat of Acrylic Resurfacer according to the following mix:

Acrylic Resurfacer	55 gallons
Water	20 - 40 gallons
Sand	600-800 pounds / 60-80 mesh
Liquid Yield	112-138 gallons

   On new asphalt, two coats of Acrylic Resurfacer shall be used to properly fill all voids in the asphalt surface. Use clean, dry 60-80 mesh sand and clean, potable water to make mixes. The quantity of sand and water in the above mix may be adjusted within above limits to complement the roughness and temperature of the surface.

2. Mix the ingredients thoroughly using accepted mixing devices and use a 70 Durometer rubber bladed squeegee to apply each coat of Acrylic Resurfacer as required.

3. Allow the application of Acrylic Resurfacer to dry thoroughly. Scrape off all ridges and rough spots prior to any subsequent application of Acrylic Resurfacer or subsequent cushion or color surface system.

3.3 APPLICATION OF ACRYLIC COLOR PLAYING SURFACE

A. All areas to be color coated shall be clean, free from sand, clay, grease, dust, salt or other foreign matters. The Contractor shall obtain the Architect/Engineer's approval, prior to applying any finish surface material.

B. Blend color base and Plexichrome with a mechanical mixer to achieve a uniform Fortified Plexipave mixture. The mix shall be:

1. Color Base 30 gallons

2. Plexichrome 20 gallons

3. Water 20 gallons

C. Application shall be made by 50 durometer rubber faced squeegees. The Fortified Plexipave mixture should be poured on to the court surface and spread to a uniform thickness in a regular pattern.

D. A total of 3 applications of Fortified Plexipave shall be made to achieve a total application rate of not less than .15 gal./sy. No application should be made until the previous application is thoroughly dry.

3.4 LINE PAINTING

A. All lines shall be 2" wide unless otherwise noted on the drawings. Lines shall be carefully laid out in accordance with ASBA and USTA guidelines. The area to be marked shall be taped to insure a crisp line. The California Line Paint shall have a texture similar to the surrounding play surface. Application shall be made by brush or roller at the rate of 150-200 sf./gal. (3/4 gal. per tennis court).

3.6 PROTECTION

A. Erect temporary barriers to protect coatings during drying and curing.

B. Lock gates to prevent use until acceptance by the Architect/Engineer.

3.7 CLEAN UP

A. Remove all containers, surplus materials and debris. Dispose of materials in accordance with local, state and Federal regulations.

B. Leave site in a clean and orderly condition.

END OF SECTION 32 18 16

SECTION 32 31 13

CHAIN LINK FENCES AND GATES

PART 1 - GENERAL

1.1 SUMMARY

A. Section Includes:

1. Chain-link fences.
2. Swing gates.

1.2 REFERENCES

A. ASTM F668 Specification for Polymer Coated Chain Link Fence Fabric

B. ASTM F900 Specification for Industrial and Commercial Swing Gates

C. ASTM F934 Specification for Standard Colors for Polymer-Coated Chain Link

D. CLFMI WLG2445, Chain Link Fence Wind Load Guide for the Selection of Line Post and Line Post Spacing

1.3 ACTION SUBMITTALS

A. Product Data: For each type of product.

1. Include construction details, material descriptions, dimensions of individual components and profiles, and finishes for the following:

a. Fence and gate posts, rails, and fittings.
b. Chain-link fabric, reinforcements, and attachments.
c. Gates and hardware.

B. Shop Drawings: For each type of fence and gate assembly.

1. Include plans, elevations, sections, details, and attachments to other work.
2. Include accessories, hardware, gate operation, and operational clearances.
3. Wiring Diagrams: For power, signal, and control wiring.

1.4 INFORMATIONAL SUBMITTALS

A. Qualification Data: For manufacturer and installer.

B. Product Certificates: For each type of chain-link fence, and gate.

C. Product Test Reports: For framework strength according to ASTM F1043, for tests performed by manufacturer and witnessed by a qualified testing agency or a qualified testing agency.

D. Sample Warranty: For special warranty.

1.5 CLOSEOUT SUBMITTALS

A. Operation and Maintenance Data: For gate operators to include in emergency, operation, and maintenance manuals.

1.6 QUALITY ASSURANCE

A. Manufacturer Qualifications: Company operating in the United States having U.S. manufacturing facility/facilities specializing in manufacturing chain link fence products with at least 5 years' experience.

B. Installer Qualifications: Company with demonstrated successful experience installing similar projects and products in accordance with ASTM F567 and have at least 5 years' experience.

C. Tolerances: Current published edition of ASTM specifications tolerances apply. ASTM specification tolerances supersede any conflicting tolerance.

1.7 FIELD CONDITIONS

A. Field Measurements: Verify layout information for chain-link fences and gates shown on Drawings in relation to property survey and existing structures. Verify dimensions by field measurements.

1.8 WARRANTY

A. Special Warranty: Manufacturer agrees to repair or replace components of chain-link fences and gates that fail in materials or workmanship within specified warranty period.

1. Failures include, but are not limited to, the following:

    a. Failure to comply with performance requirements.
    b. Deterioration of metals, metal finishes, and other materials beyond normal weathering.

2. Warranty Period: Five years from date of Substantial Completion.

PART 2 - PRODUCTS

2.1 PERFORMANCE REQUIREMENTS

A. Structural Performance: Chain-link fence and gate frameworks shall withstand the design wind loads and stresses for fence height(s) and under exposure conditions indicated according to ASCE/SEI 7.

1. Design Wind Load: As indicated on Drawings.
    a. Minimum Post Size and Maximum Spacing: Determine according to CLFMI WLG 2445, based on mesh size and pattern specified, unless noted otherwise on Drawings.

2.2 CHAIN-LINK FENCE FABRIC

A. General: Provide fabric in one-piece heights measured between top and bottom of outer edge of selvage knuckle or twist according to "CLFMI Product Manual" and requirements indicated below:

1. Fabric Height: As indicated on Drawings.
2. Steel Wire for Fabric: Wire diameter of 0.192 inch (4.88 mm), unless noted otherwise.

    a. Mesh Size: 2 inches (50 mm).
    b. Zinc-Coated Fabric (locations indicated on drawings): ASTM A392, Type II, Class 2, 2.0 oz./sq. ft. (610 g/sq. m) with zinc coating applied before weaving.
    c. Polymer-Coated Fabric (locations indicated on drawings): ASTM F668, Class 2b over zinc-coated steel wire.

        1) Color: Black, according to ASTM F934.

    d. Coat selvage ends of metallic-coated fabric before the weaving process with manufacturer's standard clear protective coating.

3. Selvage: Knuckled at both selvages.

2.3 FENCE FRAMEWORK

A. Posts and Rails: ASTM F1043 for framework, including rails, braces, and line; terminal; and corner posts. Provide members with minimum dimensions and wall thickness according to ASTM F1043 or ASTM F1083 based on the following:

1. Fence Height: As indicated on Drawings.
2. Heavy-Industrial-Strength Material: Group IA, round steel pipe, Schedule 40.

    a. Line Post: As indicated on Drawings.
    b. End, Corner, and Pull Posts: As indicated on Drawings.

3. Horizontal Framework Members: Intermediate, top, and bottom rails according to ASTM F1043.

    a. Top Rail: As indicated on Drawings.

4. Brace Rails: ASTM F1043.
5. Metallic Coating for Steel Framework (locations indicated on drawings):

    a. Type A: Not less than minimum 2.0-oz./sq. ft. (0.61-kg/sq. m) average zinc coating according to ASTM A123/A123M or 4.0-oz./sq. ft. (1.22-kg/sq. m) zinc coating according to ASTM A653/A653M.

6. Polymer coating over metallic coating (locations indicated on drawings).

    a. Color: Match chain-link fabric, according to ASTM F934.

2.4 TENSION WIRE

A. Metallic-Coated Steel Wire (locations indicated on drawings): 0.177-inch- (4.5-mm-) diameter, marcelled tension wire according to ASTM A817 or ASTM A824, with the following metallic coating:

1. Type II: Zinc coated (galvanized) by hot-dip process, with the following minimum coating weight:

    a. Matching chain-link fabric coating weight.

B. Polymer-Coated Steel Wire (locations indicated on drawings: 0.177-inch- (4.5-mm-) diameter, tension wire according to ASTM F1664, Class 2b over zinc-coated steel wire.

1. Color: Match chain-link fabric, according to ASTM F934.

2.5 SWING GATES

A. General: ASTM F900 for gate posts and swing gate types.

1. Gate Leaf Width: As indicated.
2. Framework Member Sizes and Strength: Based on gate fabric height as indicated.

B. Pipe and Tubing:

1. Zinc-Coated Steel: ASTM F1043 and ASTM F1083; protective coating and finish to match fence framework.
2. Gate Posts: Round tubular steel.
3. Gate Frames and Bracing: Round tubular steel.

C. Frame Corner Construction: Assembled with corner fittings.

D. Hardware:

1. Hinges: 360-degree inward and outward swing.
2. Latch: Permitting operation from both sides of gate with provision for padlocking accessible from both sides of gate.
3. Closer: Manufacturer's standard.

2.6 FITTINGS

A. Provide fittings according to ASTM F626.

B. Finish:

1. Metallic Coating for Pressed Steel or Cast Iron: Not less than 1.2 oz./sq. ft. (366 g/sq. m) of zinc.

a. Polymer coating over metallic coating (locations indicated on drawings).

2.7 GROUT AND ANCHORING CEMENT

A. Nonshrink, Nonmetallic Grout: Factory-packaged, nonstaining, noncorrosive, nongaseous grout complying with ASTM C1107/C1107M. Provide grout, recommended in writing by manufacturer, for exterior applications.

B. Anchoring Cement: Factory-packaged, nonshrink, nonstaining, hydraulic-controlled expansion cement formulation for mixing with water at Project site to create pourable anchoring, patching, and grouting compound. Provide formulation that is resistant to erosion from water exposure without needing protection by a sealer or waterproof coating, and that is recommended in writing by manufacturer for exterior applications.

2.8 ACCESSORIES

A. Top Rail Fence Guard: 4-1/2" diameter polyethylene construction tubing, weather-treated and UV protected. Standard color with matching mounting ties every 3 feet.

PART 3 - EXECUTION

3.1 EXAMINATION

A. Examine areas and conditions, with Installer present, for compliance with requirements for a certified survey of property lines and legal boundaries, site clearing, earthwork, pavement work, and other conditions affecting performance of the Work.

1. Do not begin installation before final grading is completed unless otherwise permitted by Architect.

B. Proceed with installation only after unsatisfactory conditions have been corrected.

3.2 PREPARATION

A. Stake locations of fence lines, gates, and terminal posts. Do not exceed intervals of 500 feet (152 m) or line of sight between stakes. Indicate locations of utilities, lawn sprinkler system, underground structures, benchmarks, and property monuments.

3.3 CHAIN-LINK FENCE INSTALLATION

A. Install chain-link fencing according to ASTM F567 and more stringent requirements specified.

B. Post Excavation: Drill or hand-excavate holes for posts to diameters and spacings indicated, in firm, undisturbed soil.

C. Post Setting: Set posts in concrete at indicated spacing into firm, undisturbed soil.

1. Verify that posts are set plumb, aligned, and at correct height and spacing, and hold in position during setting with concrete or mechanical devices.
2. Concrete Fill: Place concrete around posts to dimensions indicated and vibrate or tamp for consolidation. Protect aboveground portion of posts from concrete splatter.

a. Exposed Concrete: As indicated on Drawings.
b. Concealed Concrete: As indicated on Drawings.
c. Posts Set into Holes in Concrete: Form or core drill holes not less than 5 inches (127 mm) deep and 3/4 inch (20 mm) larger than OD of post. Clean holes of loose material, insert posts, and fill annular space between post and concrete with nonshrink, nonmetallic grout or anchoring cement, mixed and placed according to anchoring material manufacturer's written instructions. Finish anchorage joint to slope away from post to drain water.

D. Terminal Posts: Install terminal end, corner, and gate posts according to ASTM F567 and terminal pull posts at changes in horizontal or vertical alignment of 15 degrees or more and as indicated on Drawings. For runs exceeding 500 feet (152 m), space pull posts an equal distance between corner or end posts.

E. Line Posts: As indicated on Drawings.

F. Post Bracing and Intermediate Rails: Install according to ASTM F567, maintaining plumb position and alignment of fence posts. Diagonally brace terminal posts to adjacent line posts with truss rods and turnbuckles. Install braces at end and gate posts and at both sides of corner and pull posts.

1. Locate horizontal braces at midheight of fabric 72 inches (1830 mm) or higher, on fences with top rail, and as indicated on Drawings. Install so posts are plumb when diagonal rod is under proper tension.

G. Tension Wire: Install according to ASTM F567, maintaining plumb position and alignment of fence posts. Pull wire taut, without sags. Fasten fabric to tension wire with 0.120-inch- (3.05-mm-) diameter hog rings of same material and finish as fabric wire, spaced a maximum of 24 inches (610 mm) o.c. Install tension wire in locations indicated before stretching fabric. Provide horizontal tension wire at the following locations:

1. As indicated on Drawings.

H. Top Rail: Install according to ASTM F567, maintaining plumb position and alignment of fence posts. Run rail continuously through line post caps, bending to radius for curved runs and terminating into rail end attached to posts or post caps fabricated to receive rail at terminal posts. Provide expansion couplings as recommended in writing by fencing manufacturer.

I. Intermediate and Bottom Rails: Secure to posts with fittings.

J. Chain-Link Fabric: Apply fabric to outside of enclosing framework. Leave 2-inch (50-mm) bottom clearance between finish grade or surface and bottom selvage unless otherwise indicated. Pull fabric taut and tie to posts, rails, and tension wires. Anchor to framework so fabric remains under tension after pulling force is released.

K. Tension or Stretcher Bars: Thread through fabric and secure to end, corner, pull, and gate posts, with tension bands spaced not more than 15 inches (380 mm) o.c.

L. Tie Wires: Use wire of proper length to firmly secure fabric to line posts and rails. Attach wire at one end to chain-link fabric, wrap wire around post a minimum of 180 degrees, and attach other end to chain-link fabric according to ASTM F626. Bend ends of wire to minimize hazard to individuals and clothing.

1. Maximum Spacing: Tie fabric to line posts at 12 inches (300 mm) o.c. and to braces at 24 inches (610 mm) o.c.

M. Fasteners: Install nuts for tension bands and carriage bolts on the side of fence opposite the fabric side. Peen ends of bolts or score threads to prevent removal of nuts.

3.4 GATE INSTALLATION

A. Install gates according to manufacturer's written instructions, level, plumb, and secure for full opening without interference. Attach fabric as for fencing. Attach

hardware using tamper-resistant or concealed means. Install ground-set items in concrete for anchorage. Adjust hardware for smooth operation.

3.5 ADJUSTING

A. Gates: Adjust gates to operate smoothly, easily, and quietly, free of binding, warp, excessive deflection, distortion, nonalignment, misplacement, disruption, or malfunction, throughout entire operational range. Confirm that latches and locks engage accurately and securely without forcing or binding.

B. Lubricate hardware and other moving parts.

END OF SECTION 323113

SECTION 32 91 19

LANDSCAPE GRADING

PART 1 – GENERAL

1.01 Related Documents

A. Drawings and general provisions of the Contract, including General and Supplementary Conditions and Division 1 Specification Sections, apply to this Section.

1.02 SUMMARY

A. Section Includes:

1. Finish grade subsoil and proof roll.

2 Place, level and compact topsoil.

B. Related Sections:

1. Section 31 23 33 – Trenching and Backfilling: Excavation, backfill, and compaction for utility trenches.

2. Section 32 92 00 – Turf Grasses: Topsoil, lawn seeding and fertilizing.

PART 2 – PRODUCTS

2.01 MATERIALS

A. Topsoil: (Both Imported and Re-used from Stockpile) – Reference Section 32 92 00 – Turf Grasses: Section 2.2 -Topsoil.

PART 3 – EXECUTION

3.01 EXAMINATION

A. Verify conditions at the Site and note irregularities affecting the Work of this Section.

B. Beginning the Work of this Section means acceptance of existing conditions.

3.02 PREPARATION

A. Eliminate uneven areas and low spots. Remove debris, roots, branches, stones in excess of 1/2 inch in size and any contaminants. Make changes in grade gradual. Blend transitions between slopes in a smooth rounded manner.

B. Scarify subgrade to a depth of 3 inches where topsoil is scheduled. Scarify subgrade in areas where equipment has compacted subsoil.

3.03 PLACING TOPSOIL

A. Place topsoil in areas where seeding or plantings are scheduled.

B. Place topsoil in relatively dry state during dry weather.

C. Fine grade topsoil eliminating rough or low areas. Maintain levels, profiles, and contours of subgrade.

D. Remove stone, roots, grass, weeds, debris and foreign material while spreading.

E. Manually spread topsoil around trees, plants, and buildings to prevent damage.

F. Roll placed topsoil.

G. Remove surplus subsoil and topsoil from the Site.

H. Leave stockpile area and the Site clean and raked, ready to receive landscaping.

3.04 TOLERANCES

A. Top of Topsoil: Plus-or-minus 1/2 inch.

3.05 PROTECTION

A. Protect trees, shrubs, lawns and other landscaping and other features remaining as final work.

B. Protect benchmarks, existing structures, roads, sidewalks, paving and curbs.

C. Protect above or below grade utilities which are to remain.

D. Protect graded areas from traffic and erosion. Repair and re-establish grades in settled, eroded, and rutted areas.

E. Repair damage caused by the Work of this Section.

3.06 SCHEDULE OF LOCATIONS

A. Spread topsoil uniformly over the following areas in minimum depths as indicated

1. Areas covered by the Details on the Drawings: As detailed.
2. Seeded Grass: 6 inches.
3. Sod: 4 inches.
4. Shrub Beds: 18 inches.
5. Flower Beds: 12 inches.
6. Planters: To within 3 inches of rim.

END OF SECTION 329119

SECTION 32 92 00

TURF AND GRASSES

PART 1 - GENERAL

1.1 RELATED DOCUMENTS

A. Drawings and general provisions of the Contract, including General and Supplementary Conditions and Division 1 Specification Sections, apply to this Section.

1.2 SUMMARY

A. This Section includes the following:

1. Seeding.
2. Lawn renovation.

1.3 DEFINITIONS

A. Finish Grade: Elevation of finished surface of planting soil.

B. Manufactured Soil: Soil produced off-site by homogeneously blending mineral soils or sand with stabilized organic soil amendments to produce topsoil or planting soil.

C. Planting Soil: Native or imported topsoil, manufactured topsoil, or surface soil modified to become topsoil; mixed with soil amendments.

D. Subgrade: Surface or elevation of subsoil remaining after completing excavation, or top surface of a fill or backfill immediately beneath planting soil.

1.4 SUBMITTALS

A. Product Data: For each type of product indicated.

B. Certification of Grass Seed: From seed vendor for each grass-seed monostand or mixture stating the botanical and common name and percentage by weight of each species and variety, and percentage of purity, germination, and weed seed. Include the year of production and date of packaging.

1. Certification of each seed mixture for turfgrass seed, identifying source, including name and telephone number of supplier.

C. Product Certificates: For soil amendments and fertilizers, signed by product manufacturer.

D. Qualification Data: For landscape Installer.

E. Material Test Reports: For existing surface soil and imported topsoil.

F. Planting Schedule: Indicating anticipated planting dates for each type of planting.

G. Maintenance Instructions: Recommended procedures to be established by Owner for maintenance of lawns during a calendar year. Submit before expiration of required maintenance periods.

1.5 QUALITY ASSURANCE

A. Installer Qualifications: A qualified landscape installer whose work has resulted in successful lawn and meadow establishment.

1. Installer's Field Supervision: Require Installer to maintain an experienced full-time supervisor on Project site when planting is in progress.

B. Soil-Testing Laboratory Qualifications: An independent laboratory, recognized by the State Department of Agriculture, with the experience and capability to conduct the testing indicated and that specializes in types of tests to be performed.

C. Topsoil Analysis: Furnish soil analysis by a qualified soil-testing laboratory stating percentages of organic matter; gradation of sand, silt, and clay content; cation exchange capacity; sodium absorption ratio; deleterious material; pH; and mineral and plant-nutrient content of topsoil.

1. Report suitability of topsoil for lawn growth. State recommended quantities of nitrogen, phosphorus, and potash nutrients and soil amendments to be added to produce a satisfactory topsoil.

D. Preinstallation Conference: Conduct conference at Project site upon request by the CM.

1.6 DELIVERY, STORAGE, AND HANDLING

A. Seed: Deliver seed in original sealed, labeled, and undamaged containers.

1.7 SCHEDULING

A. Planting Restrictions: Plant during one of the following periods. Coordinate planting periods with maintenance periods to provide required maintenance from date of Contract Completion.

1. Spring Planting: March 15 until June 15.
2. Fall Planting: August 15 until October 15.

B. Weather Limitations: Proceed with planting only when existing and forecasted weather conditions permit.

1.8 LAWN MAINTENANCE

A. Begin maintenance immediately after each area is planted and continue until acceptable lawn is established, but for not less than the following periods (confirm schedule and coordinate with CM):

1. Seeded Lawns: 60 days from date of Contract Completion.

a. When full maintenance period has not elapsed before end of planting season, or if lawn is not fully established, continue maintenance during next planting season.

B. Maintain and establish lawn by watering, fertilizing, weeding, mowing, trimming, replanting, and other operations. Roll, regrade, and replant bare or eroded areas and remulch to produce a uniformly smooth lawn.

1. In areas where mulch has been disturbed by wind or maintenance operations, add new mulch. Anchor as required to prevent displacement.

C. Watering: Provide and maintain temporary piping, hoses, and lawn-watering equipment to convey water from sources and to keep lawn uniformly moist to a depth of 4 inches.

1. Schedule watering to prevent wilting, puddling, erosion, and displacement of seed or mulch. Lay out temporary watering system to avoid walking over muddy or newly planted areas.
2. Water lawn at a minimum rate of 1 inch per week.

D. Mow lawn as soon as top growth is tall enough to cut. Repeat mowing to

maintain specified height without cutting more than 40 percent of grass height. Remove no more than 40 percent of grass-leaf growth in initial or subsequent mowings. Do not delay mowing until grass blades bend over and become matted. Do not mow when grass is wet. Schedule initial and subsequent mowings to maintain the following grass height:

1. Mow grass 3 to 4 inches high.

E. Lawn Postfertilization: Apply fertilizer after initial mowing and when grass is dry.

1. Use fertilizer that will provide actual nitrogen of at least 1 lb/1000 sq.ft. to lawn area.

PART 2 - PRODUCTS

2.1 SEED

A. Grass Seed: Fresh, clean, dry, new-crop seed complying with AOSA's "Journal of Seed Technology; Rules for Testing Seeds" for purity and germination tolerances.

B. General Seed Mix: State-certified seed of grass species as follows, with not less than 95 percent germination, not less than 85 percent pure seed, and not more than 0.5 percent weed seed, proportioned by weight, as follows:

a. 70 percent turf-type tall fescue.
b. 20 percent perennial ryegrass (Lolium perenne).
c. 10 percent Kentucky bluegrass (Poa pratensis).

2.2 TOPSOIL

A. Topsoil: ASTM D 5268, pH range of 5.5 to 7, a minimum of 6 percent organic material content; free of stones 1 inch or larger in any dimension and other extraneous materials harmful to plant growth.

1. Topsoil Source: Amend existing in-place surface soil to produce topsoil. Verify suitability of surface soil to produce topsoil. Clean surface soil of roots, plants, sod, stones, clay lumps, and other extraneous materials harmful to plant growth.

a. Surface soil may be supplemented with imported or manufactured

topsoil from off- site sources. Obtain topsoil displaced from naturally well-drained construction or mining sites where topsoil occurs at least 4 inches deep; do not obtain from agricultural land, bogs or marshes.

2.3 INORGANIC SOIL AMENDMENTS

A. Lime: ASTM C 602, agricultural limestone containing a minimum 80 percent calcium carbonate equivalent and as follows:

1. Class: Class T, with a minimum 99 percent passing through No. 8 sieve and a minimum 75 percent passing through No. 60 sieve.
2. Provide lime in form of dolomitic limestone.

B. Sulfur: Granular, biodegradable, containing a minimum of 90 percent sulfur, with a minimum 99 percent passing through No. 6 sieve and a maximum 10 percent passing through No. 40 sieve.

C. Iron Sulfate: Granulated ferrous sulfate containing a minimum of 20 percent iron and 10 percent sulfur.

D. Aluminum Sulfate: Commercial grade, unadulterated.

E. Perlite: Horticultural perlite, soil amendment grade.

F. Agricultural Gypsum: Finely ground, containing a minimum of 90 percent calcium sulfate.

G. Sand: Clean, washed, natural or manufactured, free of toxic materials.

H. Diatomaceous Earth: Calcined, diatomaceous earth, 90 percent silica, with approximately 140 percent water absorption capacity by weight.

I. Zeolites: Mineral clinoptilolite with at least 60 percent water absorption by weight.

2.4 ORGANIC SOIL AMENDMENTS

A. Peat: Finely divided or granular texture, with a pH range of 6 to 7.5, containing partially decomposed moss peat, native peat, or reed-sedge peat and having a water-absorbing capacity of 1100 to 2000 percent.

B. Manure: Well-rotted, unleached, stable or cattle manure containing not more than 25 percent by volume of straw, sawdust, or other bedding materials; free

of toxic substances, stones, sticks, soil, weed seed, and material harmful to plant growth.

2.5 FERTILIZER

A. Bonemeal: Commercial, raw or steamed, finely ground; a minimum of 4 percent nitrogen and 20 percent phosphoric acid.

B. Superphosphate: Commercial, phosphate mixture, soluble; a minimum of 20 percent available phosphoric acid.

C. Commercial Fertilizer: Commercial-grade complete fertilizer of neutral character, consisting of fast- and slow-release nitrogen, 50 percent derived from natural organic sources of urea formaldehyde, phosphorous, and potassium in the following composition:

1. Composition: Nitrogen, phosphorous, and potassium in amounts recommended in soil reports from a qualified soil-testing agency.

D. Slow-Release Fertilizer: Granular or pelleted fertilizer consisting of 50 percent water-insoluble nitrogen, phosphorus, and potassium in the following composition:

1. Composition: Nitrogen, phosphorous, and potassium in amounts recommended in soil reports from a qualified soil-testing agency.

2.6 MULCHES

A. Straw Mulch: Provide air-dry, clean, mildew- and seed-free, salt hay or threshed straw of wheat, rye, oats, or barley.

B. Fiber Mulch: Biodegradable, dyed-wood, cellulose-fiber mulch; nontoxic; free of plant-growth or germination inhibitors; with maximum moisture content of 15 percent and a pH range of 4.5 to 6.5.

C. Nonasphaltic Tackifier: Colloidal tackifier recommended by fiber-mulch manufacturer for slurry application; nontoxic and free of plant-growth or germination inhibitors.

2.7 PESTICIDES

A. General: Pesticide, registered and approved by EPA, acceptable to authorities having jurisdiction, and of type recommended by manufacturer for each specific problem and as required for Project conditions and application. Do

not use restricted pesticides unless authorized in writing by authorities having jurisdiction.

B. Pre-Emergent Herbicide (Selective and Non-Selective): Effective for controlling the germination or growth of weeds within planted areas at the soil level directly below the mulch layer.

C. Post-Emergent Herbicide (Selective and Non-Selective): Effective for controlling weed growth that has already germinated.

2.8 PLANTING SOIL MIX

A. Planting Soil Mix: Mix topsoil with soil amendments and fertilizers as recommended in the soils report.

PART 3 - EXECUTION

3.1 EXAMINATION

A. Examine areas to receive lawns and grass for compliance with requirements and other conditions affecting performance. Proceed with installation only after unsatisfactory conditions have been corrected.

3.2 PREPARATION

A. Protect structures, utilities, sidewalks, pavements, and other facilities, trees, shrubs, and plantings from damage caused by planting operations.

1. Protect adjacent and adjoining areas from hydroseeding overspray.

B. Provide erosion-control measures to prevent erosion or displacement of soils and discharge of soil-bearing water runoff or airborne dust to adjacent properties and walkways.

3.3 LAWN PREPARATION

A. Limit lawn subgrade preparation to areas to be planted.

B. Newly Graded Subgrades: Loosen subgrade to a minimum depth of 6 inches. Remove stones larger than 1 inch in any dimension and sticks, roots, rubbish, and other extraneous matter and legally dispose of them off Owner's property.

1. Apply superphosphate fertilizer directly to subgrade before loosening.

2. Thoroughly blend planting soil mix off-site before spreading or spread topsoil, apply soil amendments and fertilizer on surface, and thoroughly blend planting soil mix.

   a. Delay mixing fertilizer with planting soil if planting will not proceed within a few days.
   b. Mix lime with dry soil before mixing fertilizer.

3. Spread planting soil mix to a depth of 6 inches but not less than required to meet finish grades after light rolling and natural settlement. Do not spread if planting soil or subgrade is frozen, muddy, or excessively wet.

   a. Spread approximately one-half the thickness of planting soil mix over loosened subgrade. Mix thoroughly into top 4 inches of subgrade. Spread remainder of planting soil mix.
   b. Reduce elevation of planting soil to allow for soil thickness of sod.

C. Unchanged Subgrades: If lawns are to be planted in areas unaltered or undisturbed by excavating, grading, or surface soil stripping operations, prepare surface soil as follows:

1. Remove existing grass, vegetation, and turf. Do not mix into surface soil.
2. Loosen surface soil to a depth of at least of 6 inches. Apply soil amendments and fertilizers according to planting soil mix proportions and mix thoroughly into top 6 inches of soil. Till soil to a homogeneous mixture of fine texture.

   a. Apply superphosphate fertilizer directly to surface soil before loosening.

3. Remove stones larger than 1 inch in any dimension and sticks, roots, trash, and other extraneous matter.
4. Legally dispose of waste material, including grass, vegetation, and turf, off Owner's property.

D. Finish Grading: Grade planting areas to a smooth, uniform surface plane with loose, uniformly fine texture. Grade to within plus or minus 1/2 inch of finish elevation. Roll and rake, remove ridges, and fill depressions to meet finish grades. Limit fine grading to areas that can be planted in the immediate future.

E. Moisten prepared lawn areas before planting if soil is dry. Water thoroughly and allow surface to dry before planting. Do not create muddy soil.

F. Restore areas if eroded or otherwise disturbed after finish grading and before

planting.

3.4 SEEDING

A. Sow seed with spreader or seeding machine. Do not broadcast or drop seed when wind velocity exceeds 5 mph. Evenly distribute seed by sowing equal quantities in two directions at right angles to each other.

1. Do not use wet seed or seed that is moldy or otherwise damaged.

B. Sow lawn seed at the rate of 6 to 8 lb/1000 sq. ft..

C. Rake seed lightly into top 1/8 inch of topsoil, roll lightly, and water with fine spray.

D. Protect seeded areas with slopes exceeding 1:6 with erosion-control fiber mesh installed and stapled according to manufacturer's written instructions.

E. Protect seeded areas with slopes not exceeding 1:6 by spreading straw mulch. Spread uniformly at a minimum rate of 2 tons/acre to form a continuous blanket 1-1/2 inches in loose depth over seeded areas. Spread by hand, blower, or other suitable equipment.

1. Anchor straw mulch by crimping into topsoil with suitable mechanical equipment.
2. Bond straw mulch by spraying with asphalt emulsion at the rate of 10 to 13 gal./1000 sq. ft.. Take precautions to prevent damage or staining of structures or other plantings adjacent to mulched areas. Immediately clean damaged or stained areas.

F. Protect seeded areas from hot, dry weather or drying winds by applying straw mulch within 24 hours after completing seeding operations. Soak and scatter uniformly to a depth of 3/16 inch and roll to a smooth surface.

3.5 HYDROSEEDING

A. Hydroseeding: Mix specified seed, fertilizer, and fiber mulch in water, using equipment specifically designed for hydroseed application. Continue mixing until uniformly blended into homogeneous slurry suitable for hydraulic application.

1. Mix slurry with nonasphaltic tackifier.
2. Apply slurry uniformly to all areas to be seeded in a one-step process. Apply mulch at a minimum rate of 1500-lb/acre dry weight but not less

than the rate required to obtain specified seed-sowing rate.

3. Apply slurry uniformly to all areas to be seeded in a two-step process. Apply first slurry application at a minimum rate of 500-lb/acre dry weight but not less than the rate required to obtain specified seed-sowing rate. Apply slurry cover coat of fiber mulch at a rate of 1000 lb/acre.

3.6 TURF RENOVATION

A. Renovate existing lawn.

B. Renovate existing lawn damaged by Contractor's operations, such as storage of materials or equipment and movement of vehicles.

1. Reestablish lawn where settlement or washouts occur or where minor regrading is required.

C. Remove sod and vegetation from diseased or unsatisfactory lawn areas; do not bury in soil.

D. Remove topsoil containing foreign materials resulting from Contractor's operations, including oil drippings, fuel spills, stone, gravel, and other construction materials, and replace with new topsoil.

E. Mow, dethatch, core aerate, and rake existing lawn.

F. Remove weeds before seeding. Where weeds are extensive, apply selective herbicides as required. Do not use pre-emergence herbicides.

G. Remove waste and foreign materials, including weeds, soil cores, grass, vegetation, and turf, and legally dispose of them off Owner's property.

H. Till stripped, bare, and compacted areas thoroughly to a soil depth of 6 inches.

I. Apply soil amendments and initial fertilizers required for establishing new lawns and mix thoroughly into top 4 inches of existing soil. Provide new planting soil to fill low spots and meet finish grades.

J. Apply seed and protect with straw mulch as required for new lawns.

K. Water newly planted areas and keep moist until new lawn is established.

3.7 PESTICIDE APPLICATION

A. Apply pesticides and other chemical products and biological control agents in accordance with requirements of authorities having jurisdiction and manufacturer's written recommendations. Coordinate applications with Owner's operations and others in proximity to the Work. Notify CM before each application is performed.

B. Post-Emergent Herbicides (Selective and Non-Selective): Apply only as necessary to treat already-germinated weeds and in accordance with manufacturer's written recommendations.

3.8 SATISFACTORY LAWNS

A. Satisfactory Seeded Lawn: At end of maintenance period, a healthy, uniform, close stand of grass has been established, free of weeds and surface irregularities, with coverage exceeding 90 percent over any 10 sq. ft. (0.92 sq. m) and bare spots not exceeding 5 by 5 inches.

B. Reestablish lawns that do not comply with requirements and continue maintenance until lawns are satisfactory.

3.9 CLEANUP AND PROTECTION

A. Promptly remove soil and debris created by lawn work from paved areas. Clean wheels of vehicles before leaving site to avoid tracking soil onto roads, walks, or other paved areas.

B. Erect barricades and warning signs as required to protect newly planted areas from traffic. Maintain barricades throughout maintenance period and remove after lawn is established. Confirm schedule and coordinate with CM.

C. Remove erosion-control measures after grass establishment period.

END OF SECTION 329200

SECTION 33 40 00

STORM DRAINAGE UTILITIES

PART 1 - GENERAL

1.01 RELATED DOCUMENTS

A. Drawings and general provisions of the Contract, including General and Supplementary Conditions and Division 1 Specification Sections, apply to this Section.

1.02 SUMMARY

A. Section includes storm sewer removal and installation from building and site to existing storm system.

B. Section 31 23 33 – Trenching and Backfilling:

1. Bedding and fill materials.

2. Protection for existing items.

3. Excavation, fill placement, compaction, backfilling and grading.

4. Measures to protect the Work of this Section.

1.03 REFERENCES

A. ASTM International:

1. Standard Specification for Clay Drain Tile and Perforated Clay Drain Tile (ASTM C-4-00).

B. Standard Practice for Installing Vitrified Clay Pipe Lines (ASTM C-12-00).

C. Standard Specification for Concrete Sewer, Storm Drain, and Culvert Pipe

D. Standard Specification for Concrete Aggregates (ASTM C-33-01).

E. Standard Specification for Reinforced Concrete Culvert, Storm Drain, and Sewer Pipe (ASTM C-76-00).

F. Standard Specification for Portland Cement (ASTM C-150-00).

G. Standard Specification for Joints for Circular Concrete Sewer and Culvert Pipe, Using Rubber Gaskets (ASTM C-443-98).

H. Standard Specification for Type PSM Poly(Vinyl Chloride) (PVC) Sewer Pipe and Fittings (ASTM D-3034-00).

I. Standard Specification for Joints for Drain and Sewer Plastic Pipes Using Flexible Elastomeric Seals (ASTM D-3212-96a).

J. Standard Specification for Elastomeric Seals (Gaskets) for Joining Plastic Pipe (ASTM F-477-99).

K. Standard Specification for Type PS-46 and Type PS-115 Poly(Vinyl Chloride) (PVC) Plastic Gravity Flow Sewer Pipe and Fittings (ASTM F-789-95a).

L. Standard Specification for Poly(Vinyl Chloride) (PVC) Profile Gravity Sewer Pipe and Fittings Based on Controlled Inside Diameter (ASTM F-794-99).

1.04 SUBMITTALS

A. Submit the following in accordance with the GENERAL REQUIREMENTS:

1. Product Data for pipes and fittings.

1.05 PROJECT CONDITIONS

A. Environmental Requirements (Pipe Laying in Cold Weather):

1. Do not lay pipe on frozen ground or frozen bedding material.

B. Heat pipe as recommended by the Pipe Manufacturer.

PART 2 - PRODUCTS

2.01 MATERIALS

A. Polyvinyl Chloride (PVC) Pipe and Fittings:

1. 4- through 15-inch diameter: Solid wall plastic pipe and fittings per ASTM F-789 or ASTM D-3034, SDR 35.

B. Joints in Plastic Pipe: Elastomeric gasket seal per ASTM D-3212 and ASTM F-477.

C. High Density Polyethylene (HDPE) Pipe and Fittings:

1. 12 inch through 36 inch diameter: AASHTO M294 Type S, Type III, Class C, Category 5, Grade P34:

   a. Perforated, corrugated pipe in gravel channel North of playing court.

   b. Solid corrugated pipe with smooth interior under pavement and lawn areas.

D. PLASTIC STORMWATER INLETS

1. General

   a. PVC surface drainage inlets shall be of the inline drain type as indicated on the drawings. The ductile iron grates for each of these fittings are to be considered an integral part of the surface drainage inlet and shall be furnished by the same manufacturer. The surface drainage inlets shall be as manufactured by Nyloplast a division of Advanced Drainage System, Inc., or an approved equal.

2. Materials

   a. The inline drain required for this project shall be manufactured from PVC pipe stock, utilizing a thermo-molding process to reform the pipe stock to the furnished configuration. The drainage pipe connection stubs shall be manufactured from PVC pipe stock and formed to provide a watertight connection with the specified pipe system. This joint tightness shall conform to ASTM D3212 for joints for drain and sewer plastic pipe using flexible elastomeric seals. The flexible elastomeric seals shall conform to ASTM F477. The pipe bell spigot shall be joined to the inline body by use of swage mechanical joint. The raw material used to manufacture the pipe stock that is used to manufacture the inline drain body and pipe stubs of the surface drainage inlets shall conform to ASTM D1784 cell class 12454.

   b. The grates furnished for all surface drainage inlets shall be ductile iron grates for sizes 8″, 10″, 12″, 15″, or 18″ (as called for on the plans) shall be specifically for each fitting so as to provide a round bottom flange that closely matches the diameter of the surface inlet.

PART 3 - EXECUTION

3.01 INSTALLATION

A. Pipe Preparation and Handling:

1. Inspect pipe and fittings prior to lowering into trench to ensure no cracked, broken, or otherwise defective materials are being used. Clean ends of pipe thoroughly. Remove foreign matter and dirt from inside of pipe and keep clean during and after laying.

B. Use proper implements, tools, and facilities for the safe and proper protection of the work. Lower pipe into the trench in such a manner as to avoid physical damage to the pipe. Remove damaged pipe from the Site. Do not drop or dump pipe into trenches under any circumstances.

C. Excavate bell holes at each joint to permit proper assembly and inspection of entire joint.

D. Laying and Jointing Pipe and Fittings:

1. Start pipe laying proceeding upgrade with spigot ends pointing in direction of flow. After a section of pipe has been lowered into the prepared trench; clean the end of the pipe to be joined, the inside of the joint, and if applicable, the rubber ring, immediately before joining the pipe. Assemble the joint following manufacturer's recommendations for type of joint used. Provide special tools and appliances required for the jointing assembly.

E. Lay pipes uniformly to line and grade so that finished sewer will present a uniform bore. Variations from line and grade in excess of the specified tolerances will be considered sufficient cause for rejection of the Work.

F. When pipes are to be jointed with rubber gaskets, warm the gasket or joint material sufficiently to facilitate making a proper joint.

G. Prevent excavated or other foreign material from getting into the pipe during the laying operation. Close and block the open end of the last laid section of pipe to prevent entry of foreign material or creep of the gasketed joints:

1. When laying operations are not in progress.

2. At the close of the day's work.

3. Whenever the workers are absent.

H. Plug or close off pipes which are stubbed off for manhole construction or for connection by others with temporary plugs.

I. Take necessary precautions to prevent the "uplift" or floating of the line prior to the completion of the backfilling operation.

J. Make connections of non-reinforced pipe to manholes or concrete structures, so that a standard pipe joint is located not more than one foot from the outside edge of the structure.

K. When field cutting or machining the pipe is necessary, use only tools and methods recommended by the Pipe Manufacturer and approved by the Engineer.

L. Check pipe for alignment and grade after joint has been made. Ensure pipe bedding forms a continuous and uniform bearing and support for the pipe barrel between joints. Apply sufficient pressure in making the joint to assure the joint is "home" as defined in Pipe Manufacturer's standard installation instructions. Place sufficient pipe cover material to secure pipe from movement before next joint is installed to assure proper pipe alignment and joint makeup.

M. Line and Grade: Do not deviate from line and grade, as established by the drawings, more than 1/2 inch for line and 1/4 inch for grade, provided that such variation does not result in a level or reverse sloping invert. Measure for grade at the pipe invert, not at the top of the pipe, because of the permissible variation in pipe wall thickness. Furnish and set the line and grade boards at maximum intervals of 25 feet. If grade boards prove impractical because of trench or other conditions, other methods of controlling line and grade may be submitted to the Engineer for approval.

N. Dewatering: Employ such means as well pointing, ditching, pumping or bailing to prevent water from entering the trench during the laying operation and allow for proper construction of the backfill in the pipe zone. Do not lay pipe in water.

O. Installation of Plastic Stormwater Inlets

1. The specified PVC drainage inlet shall be installed using conventional flexible pipe backfill materials and procedures. The backfill material shall be crushed stone or granular material meeting the requirements of class 2 material as defined in ASTM D2321. Bedding and backfill for surface drainage inlets shall be placed and compacted uniformly in accordance with ASTM D2321. The drain basin body will be cut at the time of the final grade. No brick, stone or concrete block will be required to set the grate to the final grade height.

3.02 FIELD QUALITY CONTROL

A. Notify the Engineer or local utility owner at least 24 hours prior to tapping existing main to enable inspector to witness all taps. If required, submit portion of pipe removed by boring machine to inspector.

B. Perform cleaning and testing of sewers following the current and applicable standards of the Authority having Jurisdiction.

3.03 CLEANING

A. Prior to final acceptance and final manhole to manhole inspection of the sewer system by the Owner/Engineer, flush and clean all parts of the system. Remove accumulated construction debris, rocks, gravel, sand, silt, and other foreign material from the sewer system at or near the closest downstream manhole. If necessary, use mechanical rodding or bucketing equipment.

B. Upon the Owner/Engineer's final manhole to manhole inspection of the sewer system, if foreign matter is still present in the system, re-flush and clean the sections and portions of the lines as required.

C. Measure the infiltration using a suitable weir or other acceptable device when the water table is two feet or more above of the top of the pipe line section to be tested.

D. When infiltration cannot be properly tested, test exfiltration by filling the line to be tested with water so that a head of at least two feet is provided above the water table and the top of the pipe at the upper end of the pipe line. Allow to stand until the pipe has reached its maximum absorption, but not less than four hours. After absorption, re-establish the head. Measure the amount of water required to maintain this water level during a two hour test period.

E. When leakage exceeds 250 gallons per inch of diameter per mile of pipeline per day as measured by either the infiltration or exfiltration test, take corrective measures and retest.

END OF SECTION 334400