WAYNE STATE UNIVERSITY

RELOCATION OF THE CONFUCIUS INSTITUTE TO MANOOGIAN

906 WEST WARREN AVE. DETROIT, MICHIGAN 48202

WSU PROJECT NUMBER: 155-270653

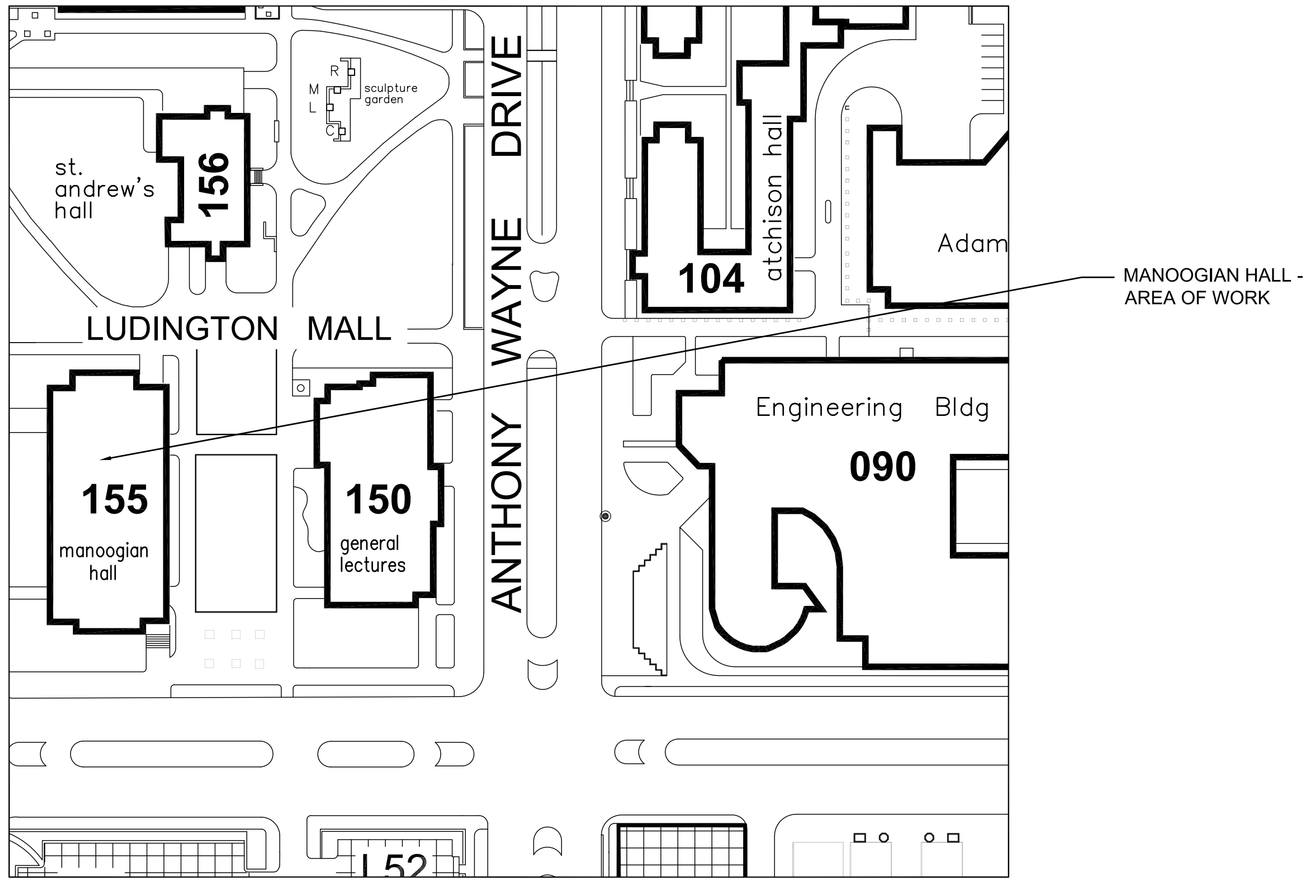

LOCATION PLAN
NO SCALE

NORTH

BIDS AND PERMITS

CLIENT:

WAYNE STATE UNIVERSITY

FACILITIES PLANNING & MANAGEMENT DESIGN SERVICES
5454 CASS AVENUE
DETROIT, MICHIGAN
48202

ARCHITECT/MECHANICAL/ELECTRICAL:

NSA ARCHITECTS, ENGINEERS, PLANNERS
FARMINGTON HILLS, MICHIGAN
(248) 477-2444

DRAWING LIST:

T-1.0	DRAWING LIST / LOCATION PLAN
A-0.1	DEMOLITION PLANS, CODE INFORMATION
A-1.0	FLOOR PLAN, REFLECTED CEILING PLAN
A-1.1	SCHEDULES AND DETAILS
M-1.0	MECHANICAL DEMOLITION AND NEW WORK PLANS
E-1.0	ELECTRICAL SYMBOL LIST, DETAIL AND GENERAL NOTES
E-1.1	ELECTRICAL FLOOR PLAN - DEMOLITION
E-1.2	ELECTRICAL FLOOR PLAN - LIGHTING
E-1.2	ELECTRICAL FLOOR PLAN - POWER

WAYNE STATE UNIVERSITY

Facilities Planning & Management Design Services
5454 Cass Ave.
Detroit MI 48202

NSA
Architects Engineers Planners

23761 Research Drive
Farmington Hills
Michigan 48335

248.477.2444
248.477.2445 fax
www.nsa-ae.com
Founded 1960

MARK	ISSUE	DATE
	BIDS AND PERMITS	11-09-15
	90% OWNER REVIEW	11-02-15
	80% OWNER REVIEW	10-02-15
	OCCUPANT REVIEW	09-17-15
	OWNER REVIEW	09-10-15

DESIGNER	ERM
DRAWN	ERM
CHECKED	ERM
DEPT MGR	RB
PROJECT MGR	

TITLE:
DRAWING LIST/ LOCATION PLAN

SCALE: DOCUMENT IS SCALED AS NOTED WHEN ISSUED AS A 24"x26" SHEET.

RELOCATION OF THE CONFUCIUS INSTITUTE TO MANOOGIAN

WSU PROJECT #: 155-270653
WSU BLDG NAME: MANOOGIAN
WSU BLDG #: 155

A/E PROJECT NO.
215048.00

SHEET NO.
T-1.0

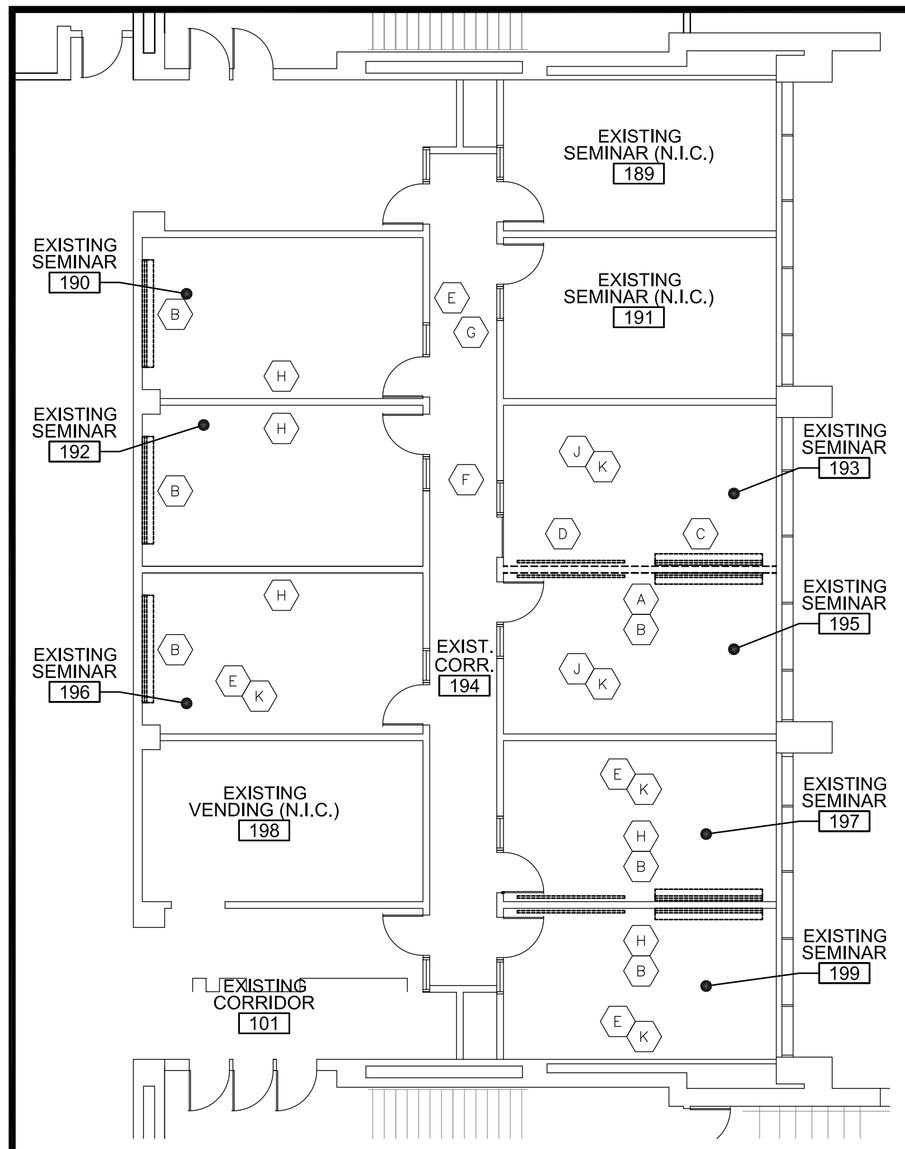

DEMO. FLOOR PLAN

SCALE: 1/8" = 1'-0"

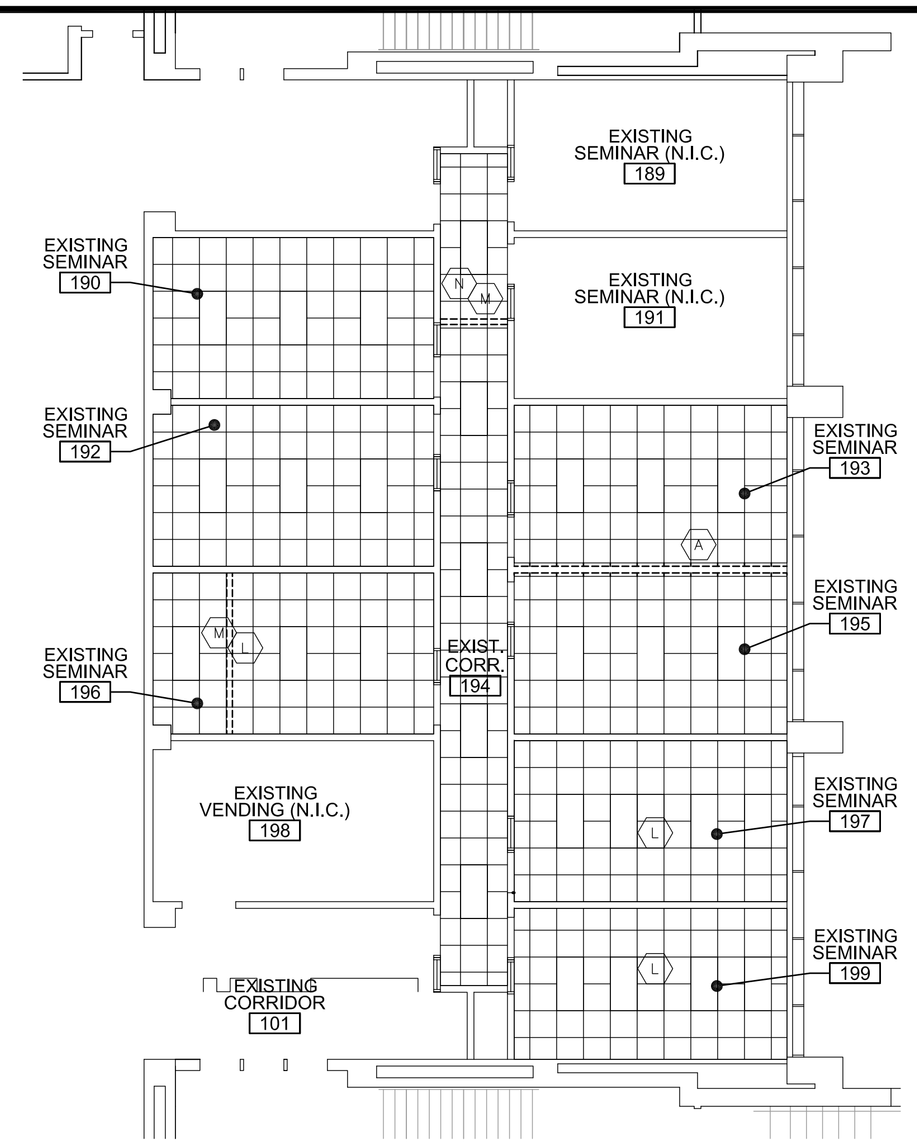

DEMOLITION REFLECTED CEILING PLAN

SCALE: 1/8" = 1'-0"

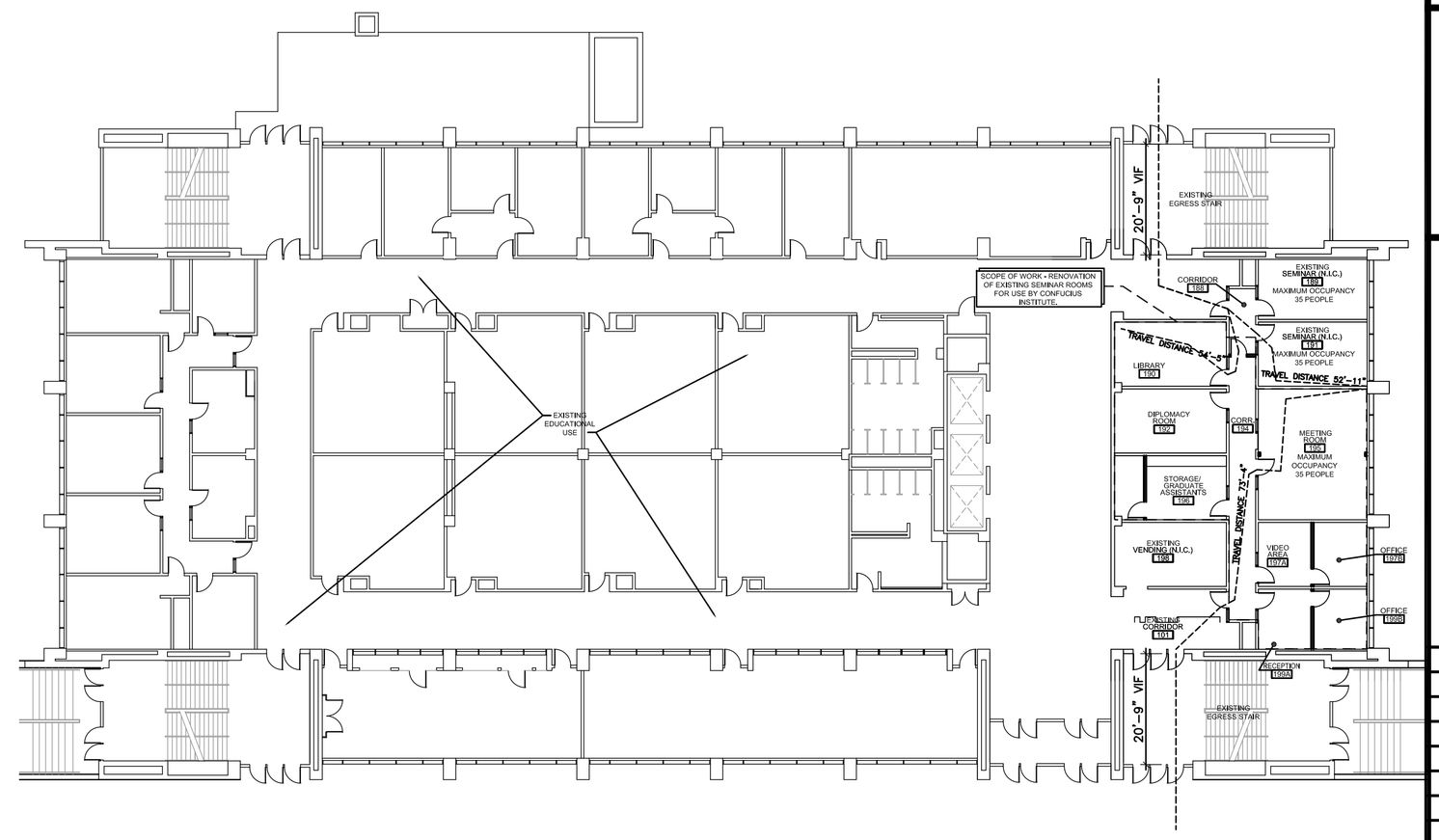

FIRST FLOOR PLAN CODE REVIEW

SCALE: N.T.S.

DEMOLITION LEGEND

- EXISTING PARTITION TO REMAIN
- REMOVE PARTITION AS INDICATED
- DEMO SUPPLY/ RETURN DIFFUSER

DEMOLITION KEY NOTES

- A — REMOVE EXISTING CMU WALL FROM FLOOR TO UNDERSIDE OF DECK. REMOVE 1ST ROW OF CEILING TILE ON BOTH SIDES OF WALL. SEE E-1.0 FOR ELECTRICAL DEMO.
- B — REMOVE PROJECTION SCREEN AND MOUNTING BRACKETS AND WHITE BOARD(S).
- C — REMOVE PROJECTION SCREEN AND MOUNTING BRACKETS AND WHITE BOARD. STORE FOR REUSE IN PROJECT.
- D — REMOVE WHITE BOARD.
- E — REMOVE STRIP OF CARPET AT NEW WALL.
- F — REMOVE ROOM NUMBER SIGN 193. RETURN TO OWNER.
- G — REMOVE ROOM NUMBER SIGN 190 AND 191. STORE FOR REUSE IN PROJECT.
- H — REMOVE EYE BOLT FROM WALL.
- J — REMOVE CARPET FROM WALL TO WALL.
- K — REMOVE WALL BASE AT ALL WALLS.
- L — SEE ELECTRICAL AND MECHANICAL DRAWINGS FOR RELOCATION OF LIGHTS AND DIFFUSERS. STORE AND REUSE CEILING TILES WITHIN PROJECT.
- M — REMOVE CEILING TILE AND GRID AT NEW WALL. STORE AND REUSE CEILING TILES WITHIN PROJECT.
- N — WSU TO RELOCATE CEILING MOUNTED IT DEVICE PRIOR TO CONSTRUCTION.

CODE INFORMATION SUMMARY

BASIC BUILDING DESCRIPTION

EXISTING 5-STORY EDUCATIONAL BUILDING WITH FULL BASEMENT. EXISTING FIRST FLOOR FOOTPRINT IS APPROXIMATELY 30,350 S.F. THE PROJECT SUITE TO BE RENOVATED IS APPROXIMATELY 2,200 S.F. THE REMAINING BUILDING IS TO REMAIN AS IS. THE PROJECT SUITE IS MADE UP OF ROOMS 188, 190, 192, 194, 195, 196, 197A, 197B, 199A, 199B AND A PLACARD SIGN LOCATED IN THE EXISTING CORRIDOR OUTSIDE OF THE SUITE. THE PROJECT SUITE WILL BE USED BY AN ON CAMPUS ORGANIZATION FOR ACTIVITIES SUPPLEMENTARY TO EDUCATION.

OCCUPANCY TYPE: B

ACTIVE FIRE SAFETY FEATURES:
- FIRE SPRINKLER SYSTEM THROUGHOUT
- FIRE ALARM SYSTEM – BATTERY BACK-UP AND EMERGENCY GENERATOR BACK-UP
- SMOKE DETECTION THROUGHOUT – EMERGENCY GENERATOR BACK-UP
- AUTOMATIC AIR HANDLING EQUIPMENT SHUTDOWN
- EXIT LIGHTS – EMERGENCY GENERATOR BACK-UP
- EMERGENCY LIGHTING – EMERGENCY GENERATOR

APPLICABLE CODES
- 2012 MICHIGAN BUILDING CODE
- 2014 NATIONAL ELECTRIC CODE (AS AMENDED BY MICHIGAN ELECTRICAL CODE PART 8)
- 2012 INTERNATIONAL ENERGY CODE WITH AMENDMENTS (2007 ASHRAE 90.1)
- 2012 INTERNATIONAL FIRE CODE WITH LOCAL AMENDMENTS
- 2012 MICHIGAN MECHANICAL CODE
- 2012 MICHIGAN PLUMBING CODE
- 2007 NFPA 13
- 2007 NFPA 72
- AMERICANS WITH DISABILITIES ACT
- 1998 MINIMUM DESIGN STANDARDS FOR HEALTH CARE FACILITIES IN MICHIGAN
- 2006 NFPA 101 LIFE SAFETY CODE (WITH STATE FIRE SAFETY BOARD AMENDMENTS)

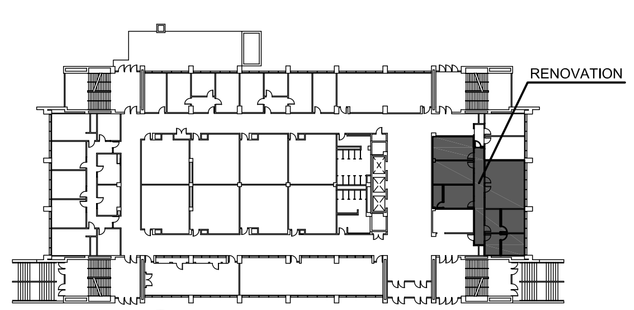

FIRST FLOOR KEY PLAN

NO SCALE

WAYNE STATE UNIVERSITY

Facilities Planning & Management
Design Services
5454 Cass Ave.
Detroit MI 48202

NSA
Architects
Engineers
Planners

23761 Research Drive
Farmington Hills
Michigan 48335

248.477.2444
248.477.2445 fax
www.nsa-ae.com
Founded 1960

MARK	ISSUE	DATE
	BIDS AND PERMITS	11-09-15
	90% OWNER REVIEW	11-02-15
	80% OWNER REVIEW	10-02-15
	OCCUPANT REVIEW	09-17-15
	OWNER REVIEW	09-10-15

DESIGNER	ERM
DRAWN	ERM
CHECKED	ERM
DEPT MGR	RB
PROJECT MGR	

TITLE:
DEMOLITION PLANS, CODE INFORMATION

SCALE: DOCUMENT IS SCALED AS NOTED WHEN ISSUED AS A 24"x36" SHEET.

RELOCATION OF THE CONFUCIUS INSTITUTE TO MANOOGIAN

WSU PROJECT #: 155-270653
WSU BLDG NAME: MANOOGIAN
WSU BLDG #: 155

A/E PROJECT NO.
215048.00

SHEET NO.
A-0.1

CABLE ORGANIZER
ROUND DESK GROMMET PLASTIC
COLOR/ PROFILE: BLACK, MT-00201 (2" HOLE)

2 / A-1.0 GROMMET DETAIL
N.T.S.

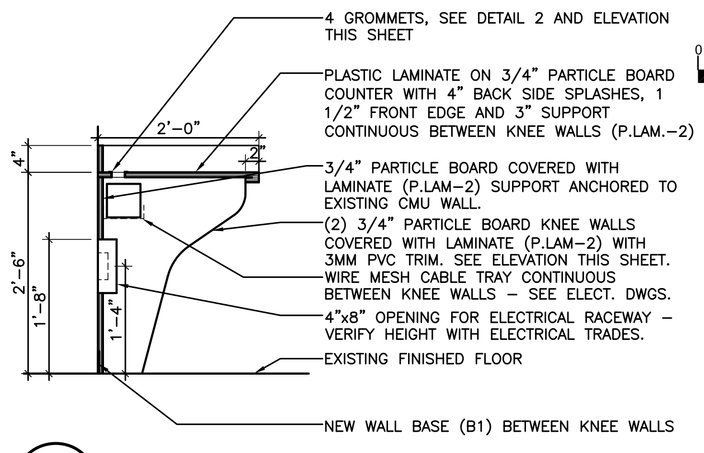

1 / A-1.0 LAMINATE COUNTER
SCALE: 3/4" = 1'-0"

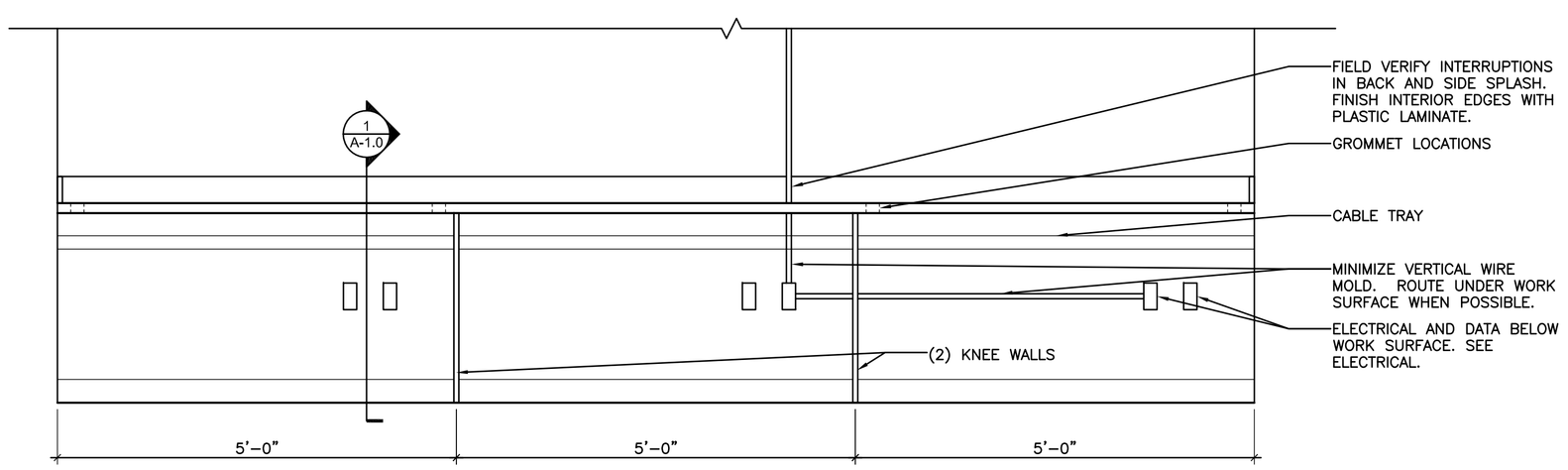

3 / A-1.0 MILLWORK ELEVATION
SCALE: 3/4" = 1'-0"

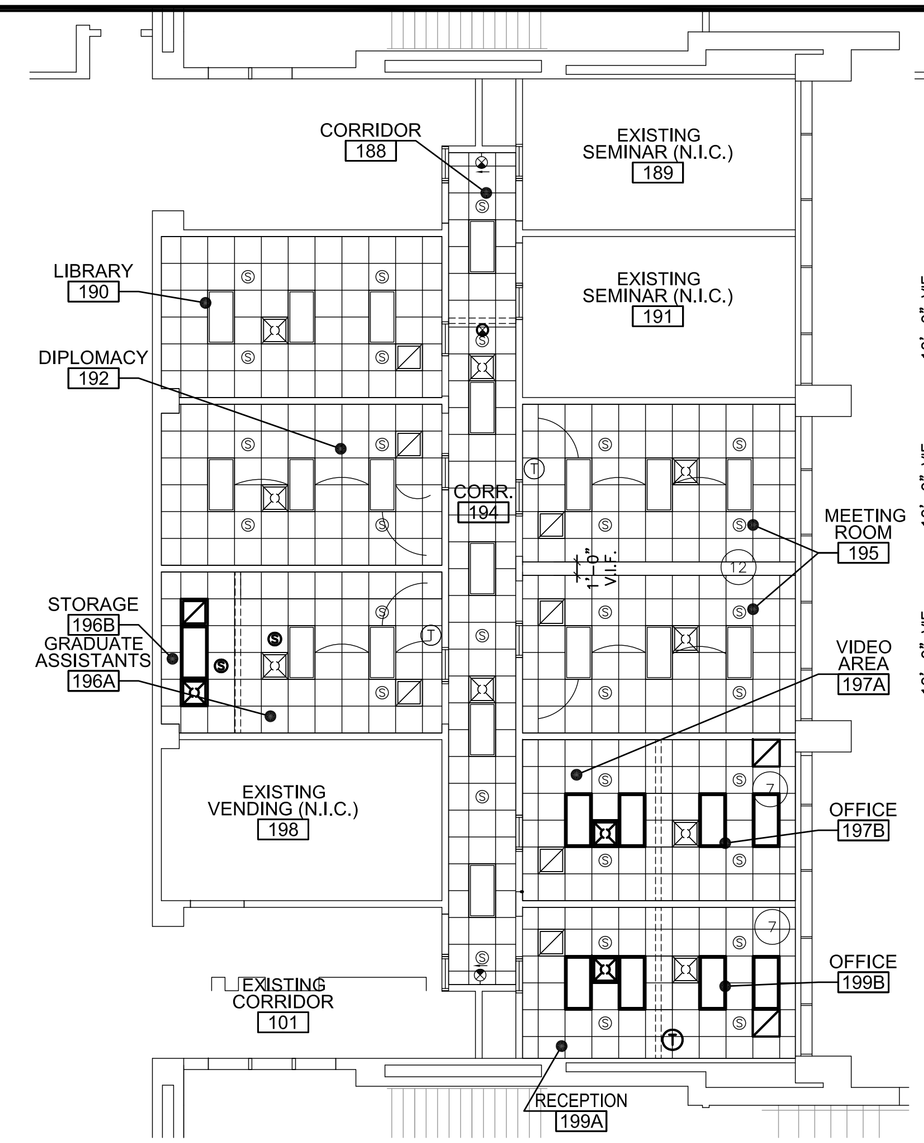

0 2' 4' 8'
REFLECTED CEILING PLAN WITH MECHANICAL
SCALE: 1/8" = 1'-0"
NORTH

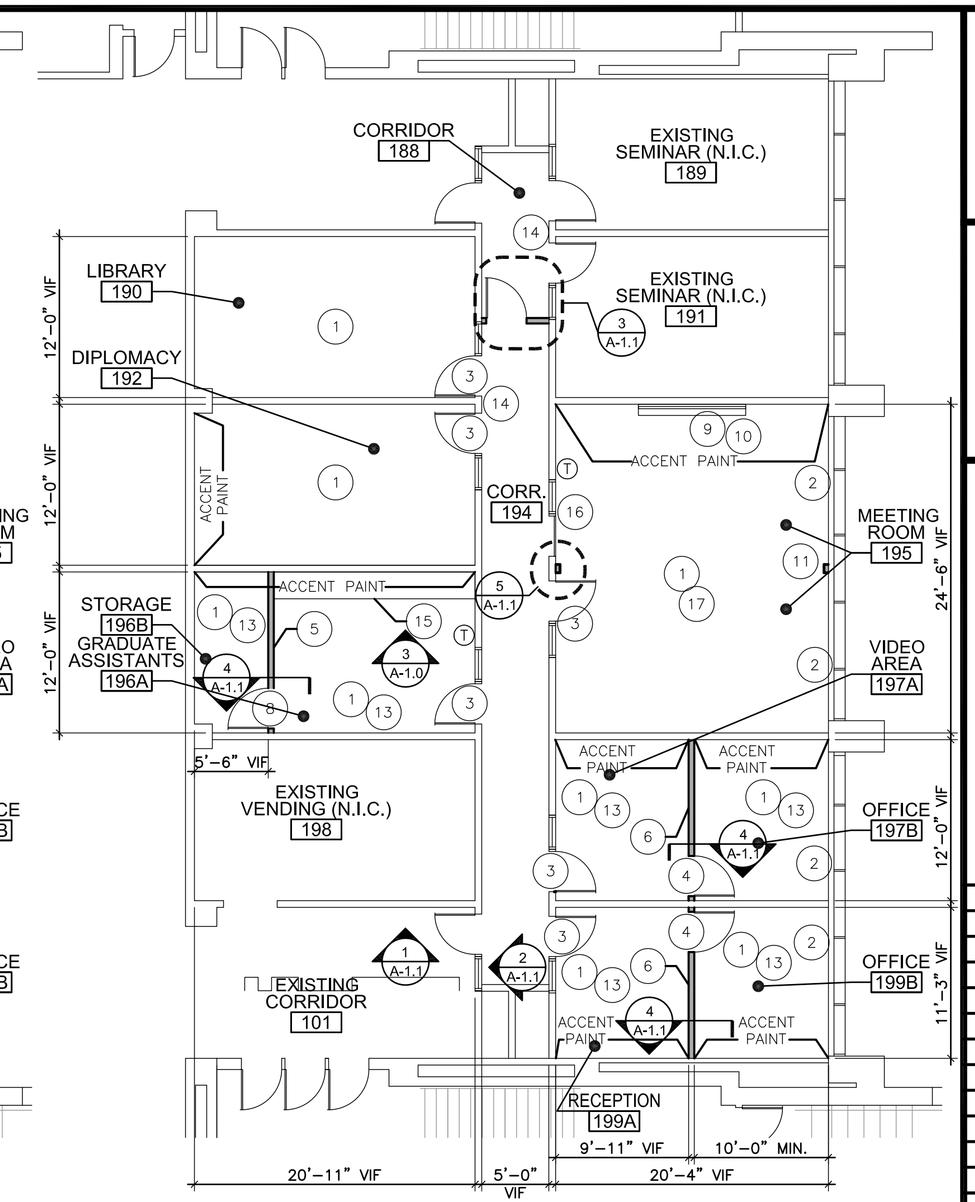

0 2' 4' 8'
FLOOR PLAN
SCALE: 1/8" = 1'-0"
NORTH

KEY NOTES (X)

1. PATCH WALLS TO MATCH ADJACENT SURFACE. FOR NEW FINISH SEE MATERIAL FINISHES SCHEDULE SHEET A-1.1
2. RADIATOR CABINETS TO REMAIN AS IS IN ROOMS 195, 197B, 199B
3. REPLACE EXISTING DOOR HARDWARE WITH ADA OFFICE LOCKSET (COORDINATE KEYING WITH WSU), MATCH EXISTING HARDWARE FINISH
4. NEW SOLID DOOR: 3'-0" X 7'-0", SOLID WOOD DOOR FINISHED TO MATCH EXISTING DOORS IN PROJECT SUITE (PL1), KNOCK DOWN HOLLOW METAL FRAME WITH SOUND SEAL, THREE HINGES, OFFICE LOCKSET (COORDINATE KEYING WITH WSU), MATCH EXISTING HARDWARE FINISH, WALL STOP BUMPER
5. NEW PARTITION WALL: 5/8" GYP. BOARD BOTH SIDES OF 3 5/8" METAL STUDS. PAINT AND INSTALL WALL BASE BOTH SIDES. WALL EXTENDS FROM CONCRETE SUB FLOOR TO UNDERSIDE OF DECK.
6. NEW PARTITION WALL: 5/8" GYP. BOARD BOTH SIDES OF 3 5/8" METAL STUDS WITH SOUND INSULATION. PAINT AND INSTALL WALL BASE BOTH SIDES. WALL EXTENDS FROM CONCRETE SUB FLOOR TO UNDERSIDE OF EXISTING CEILING. SEE DETAIL 4/A-1.1
7. PROVIDE SOUND INSULATION ABOVE CEILING TILES AT THIS ROOM. PROVIDE BAFFLE AT LIGHT.
8. NEW SOLID DOOR: 3'-0" X 7'-0", SOLID WOOD DOOR FINISHED TO MATCH EXISTING DOORS IN PROJECT SUITE (PL1), KNOCK DOWN HOLLOW METAL FRAME, THREE HINGES, OFFICE LOCKSET (COORDINATE KEYING WITH WSU), MATCH EXISTING HARDWARE FINISH, WALL STOP BUMPER, 1" UNDER CUT
9. REINSTALL WHITE BOARD, CENTER IN WALL, BOTTOM OF FRAME 36" A.F.F.
10. REINSTALL PROJECTION SCREEN, CENTER IN WALL. REMOUNT BRACKET 8'-6" A.F.F., HANG SCREEN FROM BRACKETS.
11. NEW PARTITION WALL: 5/8" GYP. BOARD ON 3 5/8" METAL STUDS. PAINT AND INSTALL WALL BASE. WALL EXTENDS FROM FINISH FLOOR TO UNDERSIDE OF SOFFIT. WALL TO COVER THE DAMAGE CAUSED BY REMOVING THE CMU WALL.
12. SOFFIT: 8'-11" A.F.F., METAL STUD FRAME WITH 5/8" TYPE C GYP. BOARD ATTACHED TO EXISTING STRUCTURE.
13. INSTALL WALL BASE, ALL WALLS. SEE FINISH SCHEDULE A-1.1
14. REINSTALL ROOM NUMBER SIGNS 190 AND 191.
15. 15'-0" (VIF) MILLWORK COUNTER. SEE DETAIL 1/A-1.0
16. DOOR TO REMAIN. REPLACE HARDWARE WITH KEY ACCESS ONLY. REMOVE DOOR KNOB. RETURN TO OWNER.
17. INSTALL WALL TO WALL CARPET AND BASE. SEE FINISH SCHEDULE A-1.1

GENERAL NOTES

1. THE PROJECT SUITE IS MADE UP OF ROOMS 188, 190, 192A, 192B, 194, 195, 196, 197A, 197B, 199A, 199B AND A PLACARD SIGN DETAILED IN 1/A-1.1.
2. PROTECT EXISTING CARPET, WALL BASE, WINDOWS, WINDOW TREATMENT, LIGHT FIXTURES, CEILING GRID, CEILING TILES, DOORS, DOOR FRAMES, WINDOWS, RADIATORS, SWITCH COVERS, AND RECEPTACLE COVERS TO REMAIN. CLEAN ALL ITEMS AT THE END OF CONSTRUCTION.
3. TYPICAL CEILING HEIGHT IS: 9'-0" V.I.F.
4. FURNITURE BY OWNER
5. CENTER SPRINKLER HEADS WITHIN CEILING GRID. FIRE PROTECTION CONTRACTOR TO REWORK SPRINKLER HEADS AS REQUIRED TO MEET NFPA 13.

LEGEND

- EXISTING PARTITION TO REMAIN
- NEW PARTITION
- SPRINKLER
- EXISTING LIGHT FIXTURE
- EXISTING THERMOSTAT
- EXISTING SUPPLY/ RETURN DIFFUSER
- NEW SUPPLY/ RETURN DIFFUSER

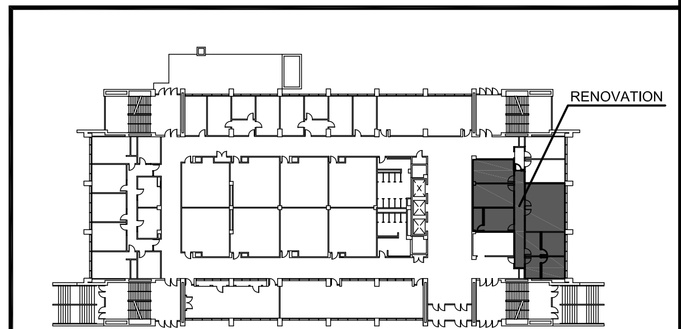

FIRST FLOOR KEY PLAN
NO SCALE

WAYNE STATE UNIVERSITY

Facilities Planning & Management Design Services
5454 Cass Ave.
Detroit MI 48202

NSA
Architects
Engineers
Planners

23761 Research Drive
Farmington Hills
Michigan 48335

248.477.2444
248.477.2445 fax
www.nsa-ae.com
Founded 1960

MARK	ISSUE	DATE
	BIDS AND PERMITS	11-09-15
	90% OWNER REVIEW	11-02-15
	ALTERNATE 80% OWNER REVIEW	10-13-15
	80% OWNER REVIEW	10-02-15
	OCCUPANT REVIEW	09-17-15
	OWNER REVIEW	09-10-15

DESIGNER	ERM
DRAWN	ERM
CHECKED	ERM
DEPT MGR	RB
PROJECT MGR	

TITLE:
FLOOR PLAN, REFLECTED CEILING PLAN

SCALE: DOCUMENT IS SCALED AS NOTED WHEN ISSUED AS A 24"x26" SHEET.

RELOCATION OF THE CONFUCIUS INSTITUTE TO MANOOGIAN

WSU PROJECT #: 155-270653
WSU BLDG NAME: MANOOGIAN
WSU BLDG #: 155

A/E PROJECT NO.
215048.00

SHEET NO.
A-1.0

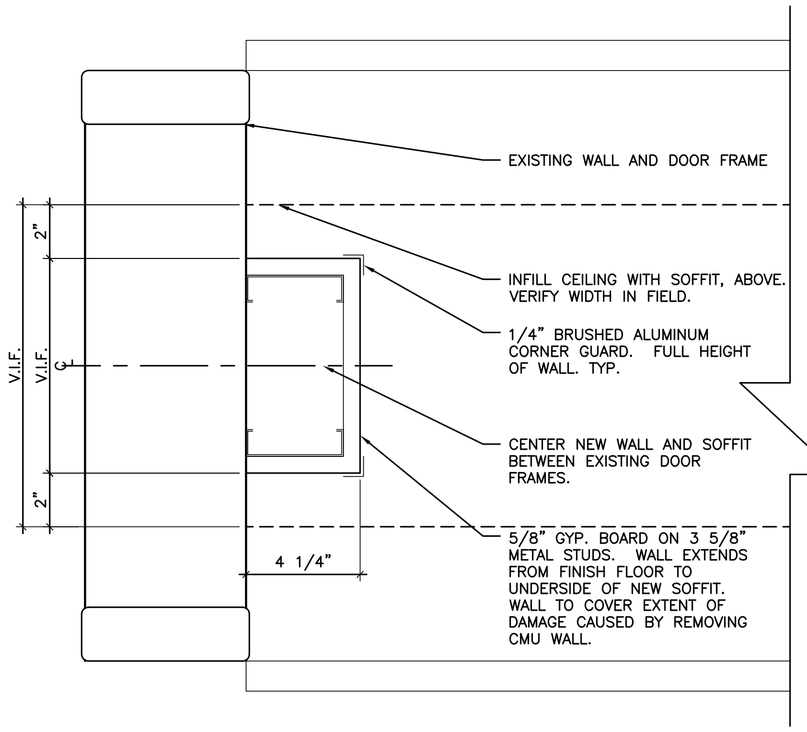

5 A-1.0 WALL DETAIL - PLAN

SCALE: 1/2" = 1'-0"

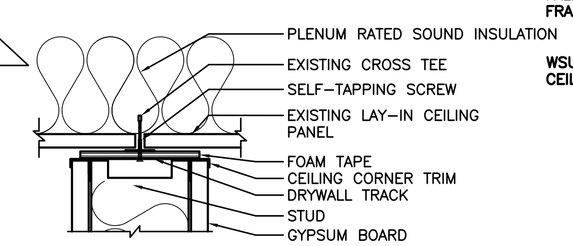

4 A-1.0 WALL DETAIL - SECTION

SCALE: 3" = 1'-0"

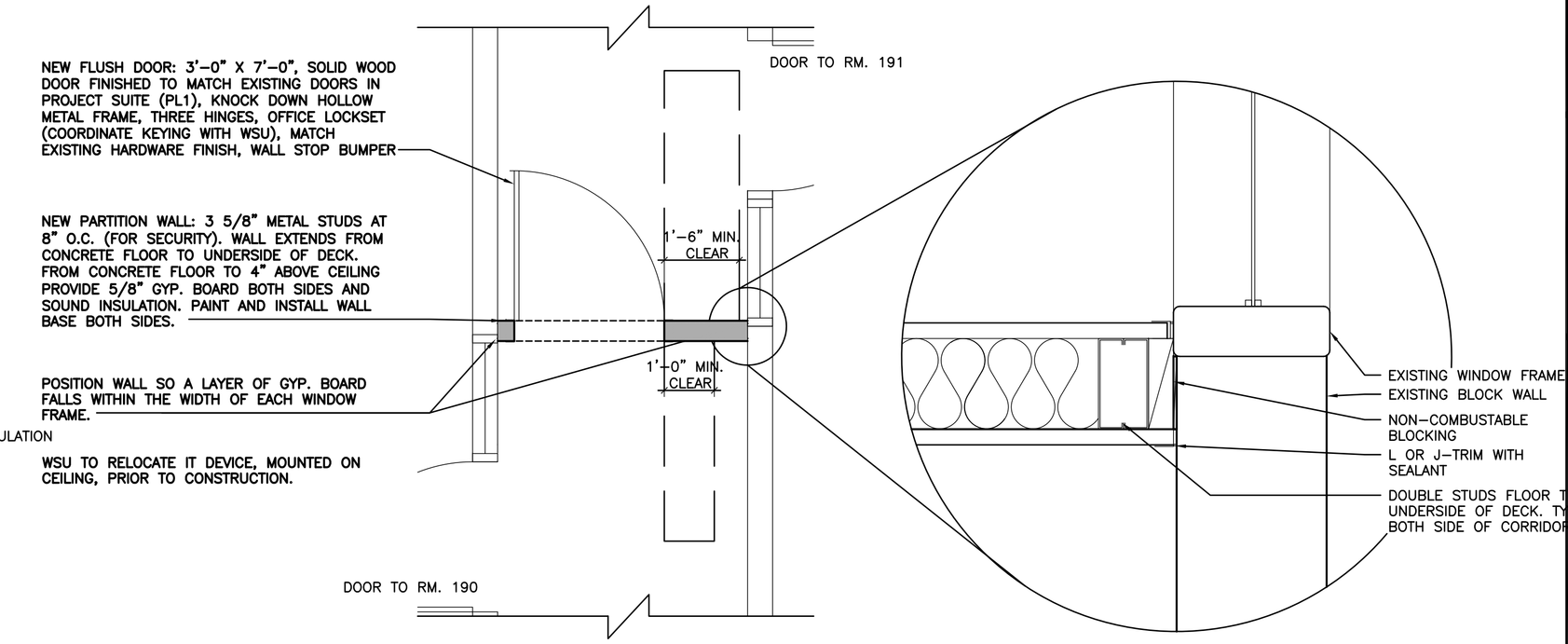

3 A-1.0 CORRIDOR DOOR DETAIL PLAN

SCALE: 1/2" = 1'-0"

ROOM FINISH SCHEDULE

ROOM NUMBER	ROOM NAME	FLOOR MAT'L	BASE MAT'L	WALLS								WAINS. MAT'L	CEILING			REMARKS	ROOM NUMBER
				NORTH		EAST		SOUTH		WEST							
				MAT'L	FINISH	MAT'L	FINISH	MAT'L	FINISH	MAT'L	FINISH		MAT'L	FINISH	HEIGHT		
101	EXISTING CORRIDOR	E.	E.	E.CMU	E.P	E.CMU	E.P	E.CMU	E.P	E.CMU	E.P	–	E.ACT	E.FF	–	–	101
188	CORRIDOR	E.CPT1	E.B1	E.CMU	P1	E.CMU	P1	E.CMU	P1	E.CMU	P1	–	E.ACT	E.FF	–	–	188
190	LIBRARY	E.CPT1	E.B1	E.CMU	P1	E.CMU	P1	E.CMU	P1	E.CMU	P1	–	E.ACT	E.FF	–	–	190
192	DIPLOMACY ROOM	E.CPT1	E.B1	E.CMU	P1	E.CMU	P1	E.CMU	P2	E.CMU	P1	–	E.ACT	E.FF	–	1	192
195	MEETING ROOM	CPT2	B1	E.CMU	P1	E.CMU	P1	E.CMU	P1	E.CMU	P2	–	E.ACT	E.FF	–	1,3	195
196A	GRAD ASSISTANTS	E.CPT1	B1	E.CMU	P1	E.CMU	P1	E.CMU	P1	E.CMU	P2	–	E.ACT	E.FF	–	1	196A
196B	STORAGE	E.CPT1	B1	E.CMU	P1	E.CMU	P1	E.CMU	P1	E.CMU	P2	–	E.ACT	E.FF	–	1	196B
197A	VIDEO AREA	E.CPT1	B1	E.CMU	P1	E.CMU	P1	E.CMU	P1	E.CMU	P2	–	E.ACT	E.FF	–	1	197A
197B	OFFICE	E.CPT1	B1	E.CMU	P1	E.CMU	P1	E.CMU	P1	E.CMU	P2	–	E.ACT	E.FF	–	1	197B
199A	RECEPTION	E.CPT1	B1	E.CMU	P1	E.CMU	P2	E.CMU	P1	E.CMU	P1	–	E.ACT	E.FF	–	1	199A
199B	OFFICE	E.CPT1	B1	E.CMU	P1	E.CMU	P2	E.CMU	P1	E.CMU	P1	–	E.ACT	E.FF	–	1	199B

MATERIAL FINISHES

CODE	DISTRIBUTOR	MANUFACTURER	SPECIFICATIION	REMARKS
E.CPT1	VALENTINA KATIKOS 248.444.8894 valentina.katikos@patcraft.com	PATCRAFT	COLLECTION: NEVER ENDING SERIES STYLE: MODERNE 10155 COLOR: UNDERSTATED 00808 SIZE: BROADLOOM	GENERAL
CPT2	VALENTINA KATIKOS 248.444.8894 valentina.katikos@patcraft.com	PATCRAFT	STYLE: SPLASH 10060 COLOR: TUCK 60803 SIZE: TILE INSTALL:	MEETING ROOM, PATCH AND REPAIR FLOOR FOR NEW CARPET
B1	BLAKELY PRODUCTS COMPANY MARCUS L. PERRY 586.246.1338 marcus.perry@blakelyproducts.com	ROPPE	COLOR: P155 NUT BROWN SIZE: 4" HIGH	PATCH AND REPAIR WALLS FOR NEW WALL BASE.
P1		BENJAMIN MOORE	MATCH EXISTING	GENERAL WALL PAINT
P2		SHERWIN WILLIAMS	COLOR: SW7508 TAVERN FINISH: EGGSHELL	ACCENT WALL PAINT
P3		SHERWIN WILLIAMS	MATCH EXISTING	PAINTED DOOR FRAMES – NOT USED
P4		BENJAMIN MOORE	MATCH EXISTING	CEILING PAINT
PL1		WILSONART	MATCH EXISTING	PLASTIC LAMINATE DOORS
PL2		WILSONART	4912-38 GILDED MESH	COUNTERTOP, SIDESPLASH AND BACKSPLASH

ROOM FINISH NOTES:

1. ACCENT WALL TO BE PAINTED: P2. REFER TO SHEET A-1.0 FLOOR PLAN FOR EXTENT OF ACCENT WALL PAINT AND LOCATION.
2. NOT USED
3. P4-SOFFIT

FINISH KEY:

E.	EXISTING
CPT	CARPET
B	BASE
CMU	CONCRETE MASONRY UNIT
ACP	ACOUSTICAL CEILING PANEL
P	PAINT
FF	FACTORY FINISH
PL	PLASTIC LAMINATE

NOTES:
1. OBTAIN LOGO IMAGE FILE FROM WSU
2. CENTER DECAL WITHIN WINDOW FRAME
3. DECAL COLOR TO BE FROSTED WHITE

2 A-1.0 VINYL SIGN

SCALE: 3" = 1'-0"

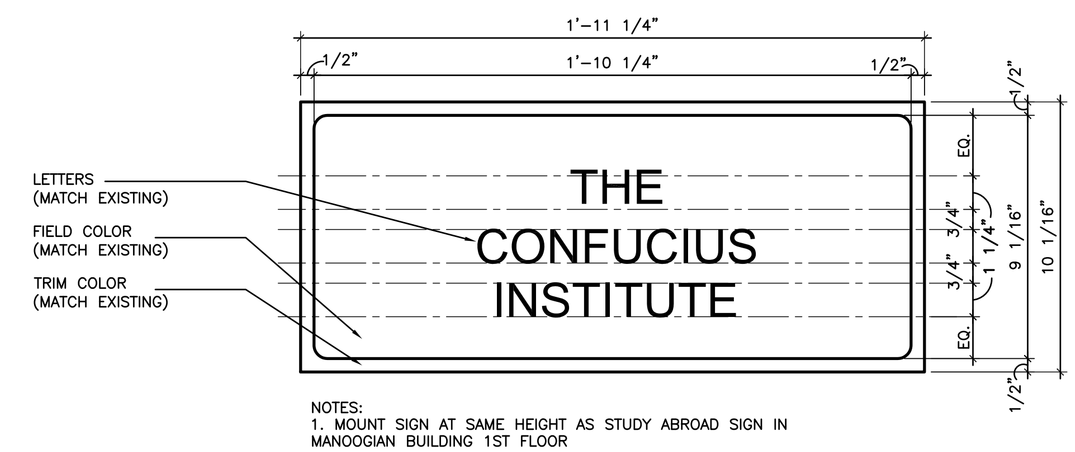

NOTES:
1. MOUNT SIGN AT SAME HEIGHT AS STUDY ABROAD SIGN IN MANOOGIAN BUILDING 1ST FLOOR

1 A-1.0 SIGN TYPE TO MATCH EXISTING @ 'STUDY ABROAD AND GLOBAL PROGRAMS'

SCALE: 3" = 1'-0"

WAYNE STATE UNIVERSITY

Facilities Planning & Management Design Services 5454 Cass Ave. Detroit MI 48202

NSA
Architects
Engineers
Planners

23761 Research Drive
Farmington Hills
Michigan 48335

248.477.2444
248.477.2445 fax
www.nsa-ae.com
Founded 1960

MARK	ISSUE	DATE
	BIDS AND PERMITS	11-09-15
	90% OWNER REVIEW	11-02-15
	80% OWNER REVIEW	10-02-15
	OCCUPANT REVIEW	09-17-15
	OWNER REVIEW	09-10-15

DESIGNER	ERM
DRAWN	ERM
CHECKED	ERM
DEPT MGR	RB
PROJECT MGR	

TITLE:
SCHEDULES AND DETAILS

SCALE: DOCUMENT IS SCALED AS NOTED WHEN ISSUED AS A 24"x26" SHEET.

RELOCATION OF THE CONFUCIUS INSTITUTE TO MANOOGIAN

WSU PROJECT #: 155-270653
WSU BLDG NAME: MANOOGIAN
WSU BLDG #: 155

A/E PROJECT NO.
215048.00

SHEET NO.
A-1.1

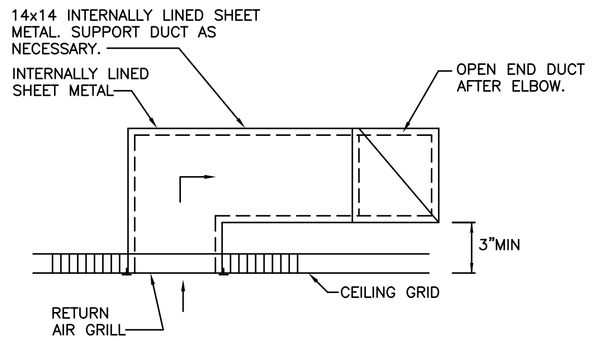

1 / M-1.0 TYPICAL CEILING RETURN AIR GRILLE SOUND TRAP

SCALE: NONE

GENERAL MECHANICAL NOTES

1. ALL REQUIRED PERMITS, LICENSES, INSPECTIONS, APPROVALS AND FEES FOR MECHANICAL WORK SHALL BE SECURED AND PAID FOR BY THE MECHANICAL CONTRACTOR. ALL WORK SHALL CONFORM TO ALL APPLICABLE CODES, RULES, AND REGULATIONS.
2. CONTRACTOR SHALL VERIFY THE SPACE CONDITIONS AND DIMENSIONS PRIOR TO THE INSTALLATION OF THE MECHANICAL MODIFICATION.
3. ALL SHEET METAL DUCTWORK AND FITTINGS SHALL BE SECURELY INSTALLED AND STEEL ANGLED REINFORCED AND PROPERLY SUPPORTED IN ACCORDANCE WITH THE LATEST SMACNA STANDARDS. ALL CONNECTIONS AND JOINTS IN THE DUCTWORK SHALL BE SEALED AND CAULKED AIR TIGHT IN AN APPROVED MANNER FOR THE VARIOUS PRESSURE APPLICATIONS.
4. CONTRACTOR SHALL VERIFY THE OPERATION OF ALL EXISTING (TO REMAIN) HVAC DEVICES SUCH AS SENSORS AND DETECTORS, AND TO CONFIRM ACHIEVING THE DESIGNATED PERFORMANCE AFTER THE NEW DUCT AND HVAC CONTROL INSTALLATION TO OBTAIN A COMPLETE OPERATIONAL SYSTEM.
5. COORDINATE SUPPORT HANGERS FOR DUCTWORK, WITH NEW INSTALLATION AND WITH EXISTING CONDITIONS TO AVOID INTERFERENCES.
6. CONTRACTOR SHALL PROVIDE EXTERIOR INSULATION TO ALL SUPPLY, AND RETURN DUCTS IN UNCONDITIONED SPACES. INSUALTION TO MATCH EXISTING IN THICKNESS AND TYPE. FIELD VERIFICATION REQUIRED.
7. RELOCATE EXISTING THERMOSTAT SHOWN ON PLANS AT MOUNTING HEIGHT TO MATCH EXISTING.
8. ALL WORK SHALL BE COORDINATED WITH ALL TRADES INVOLVED. OFFSETS IN DUCTS (INCLUDED DIVIDED DUCTS) AND TRANSITIONS AROUND OBSTRUCTIONS SHALL BE PROVIDED AT NO ADDITIONAL COST TO OWNER.
9. REFER TO ARCHITECTURAL CEILNG PLANS FOR EXACT LOCATIONS OF AIR DEVICES.
10. INTERRUPTION OF EXISTING ACTIVE PIPING AND DUCTWORK: WHEN THE COURSE OF WORK MAKES SHUTDOWN OF SERVICES UNAVOIDABLE, THE MECHANICAL CONTRACTOR SHALL SCHEDULE THE SHUTDOWN AT SUCH TIME AS APPROVED BY THE OWNER, WHICH WILL CAUSE LEAST INTERFERENCE WITH ESTABLISHED OPERATING ROUTINE.
11. THE MECHANICAL CONTRACTOR SHALL VISIT THE JOB SITE TO INTERPRET THE DRAWINGS AND DETERMINE THE FULL EXTENT OF THE WORK REQUIRED.
12. SEAL THE SPACE DUCT OPENINGS THROUGH WALLS, FLOORS AND CEILINGS. SEALANT SHALL BE JOHNS MANVILLE DUXSEAL OR TREMCO ACOUSTICAL SEALANT.
13. ALL CUTTING, PATCHING AND REPAIR WORK SHALL BE DONE BY THE TRADES WHO INSTALLED THE WORK AND PAID FOR BY THE TRADES FOR WHOM THE WORK IS DONE.

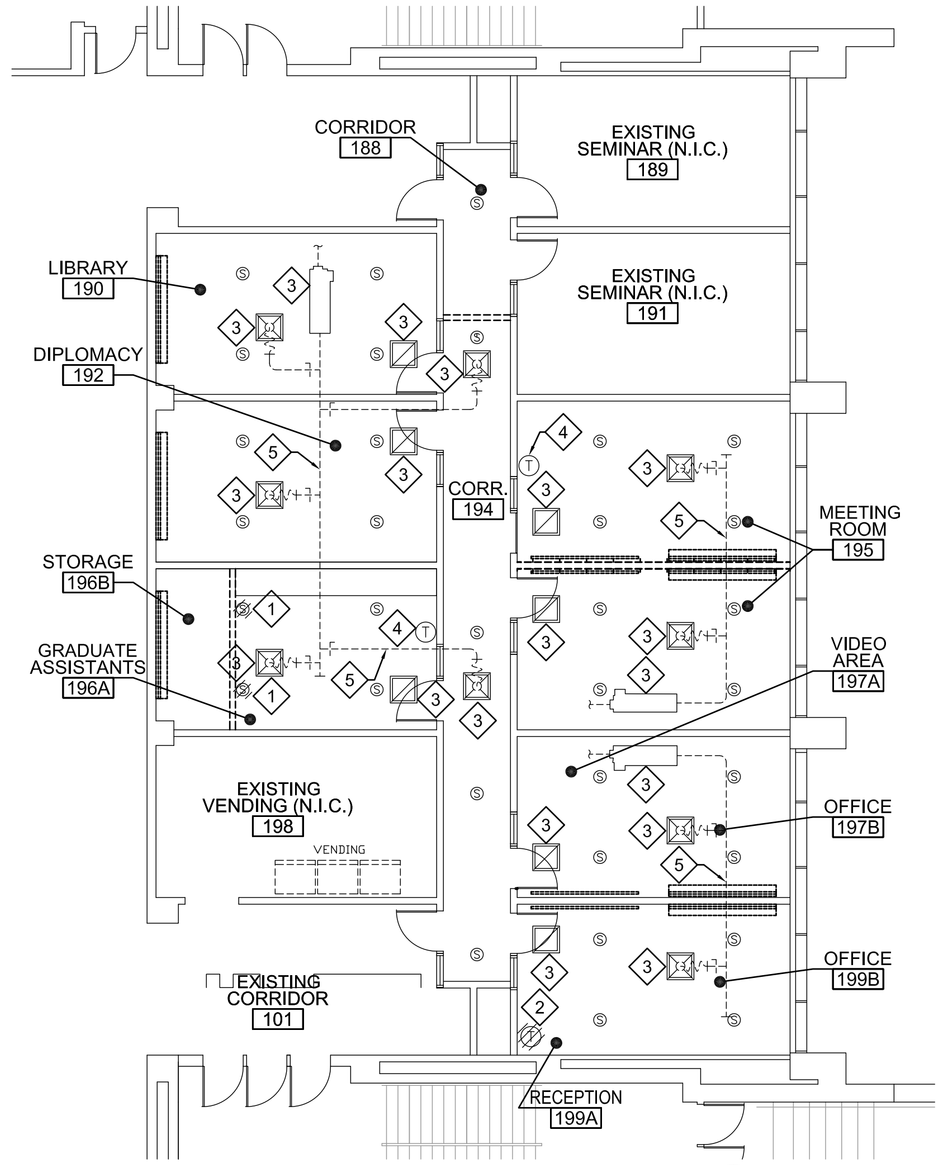

0 2' 4' 8' MECHANICAL DEMOLITON PLAN NORTH

SCALE: 1/8" = 1'-0"

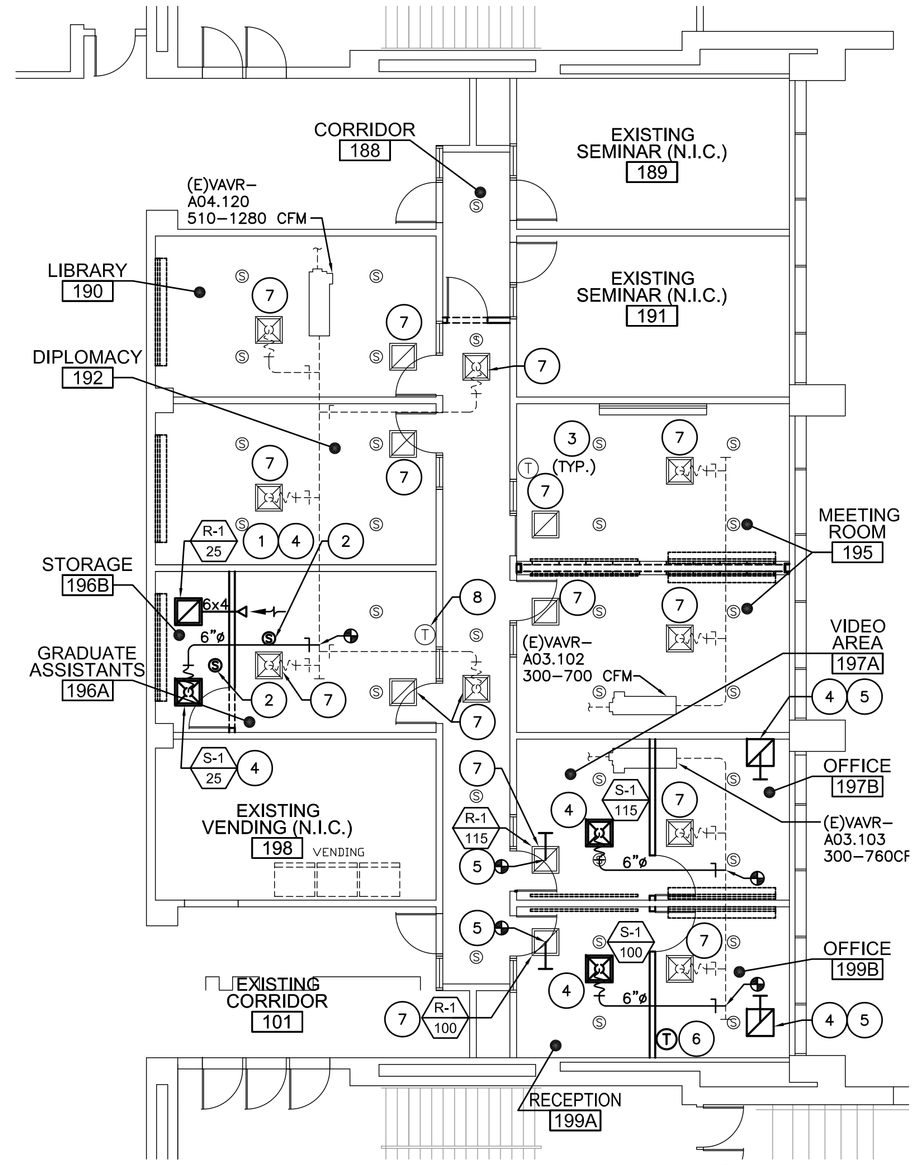

0 2' 4' 8' MECHANICAL NEW WORK PLAN NORTH

SCALE: 1/8" = 1'-0"

DEMOLITION KEY NOTES

1. REMOVE EXISTING FIRE PROTECTON SPRINKLER HEAD AND REINSTALL INTO CEILING GRID. SEE MECHANICAL NEW PLAN FOR NEW LOCATION.
2. REMOVE EXISTING THERMOSTAT IN RECEPTION 199A AND REINSTALL IN OFFICE 199B. SEE MECHANICAL NEW WORK PLAN FOR NEW LOCATION.
3. EXISTING AIR DEVICES TO REMAIN.
4. EXISTING THERMOSTAT TO REMAIN.
5. EXISTING DUCTWORK TO REMAIN.

KEY NOTES

1. INSTALL RETURN AIR GRILLE. PROVIDE NEW 6x4 RETURN AIR DUCT WITH OPEN END. EXTEND DUCT INTO GRADUATE ASSISTANTS ROOM 196A CEILING SPACE.
2. RELOCATED EXISTING FIRE PROTECTION SPRINKLER HEAD INTO NEW LOCATION.
3. EXISTING FIRE PROTECTION SPRINKLER HEAD TO REMAIN.
4. PROVIDE NEW SUPPLY AIR DIFFUSER OR RETURN AIR GRILLE. DEVICE TO MATCH EXISTING MANUFACTURER, TYPE AND COLOR. FIELD VERIFICATION REQUIRED.
5. PROVIDE NEW RETURN AIR SOUND TRAP FOR RETRUN AIR GRILLE. SEE MECHANICAL DETAIL 1 THIS SHEET.
6. RELOCATED THERMOSTAT.
7. EXISTING AIR DEVICES TO REMAIN.
8. EXISTING THERMOSTAT TO REMAIN.

LEGEND

- NEW WORK
- EXISTING WORK
- DEMOLITON WORK
- EXISTING SPRINKLER HEAD
- RELOCATED SPRINKLER
- EXISTING THERMOSTAT
- EXISTING SUPPLY/ RETURN DIFFUSER
- NEW SUPPLY/ RETURN DIFFUSER
- EXISTING VAV BOX
- EXISTING BALANCE DAMPER
- NEW BALANCE DAMPER
- FLEX CONNECTION
- POINT OF NEW CONNECTION
- OPEN END DUCT
- (E) EXISTING

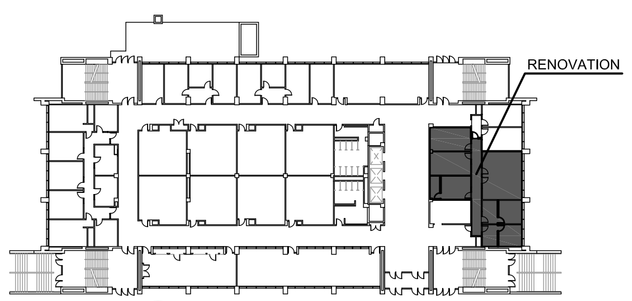

FIRST FLOOR KEY PLAN

NO SCALE

WAYNE STATE UNIVERSITY

Facilities Planning & Management Design Services 5454 Cass Ave. Detroit MI 48202

NSA Architects Engineers Planners

23761 Research Drive
Farmington Hills
Michigan 48335

248.477.2444
248.477.2445 fax
www.nsa-ae.com
Founded 1960

MARK	ISSUE	DATE
	BIDS AND PERMITS	11–09–15

DESIGNER	NH
DRAWN	SR
CHECKED	AS
DEPT MGR	NH
PROJECT MGR	

TITLE: MECHANICAL DEMOLITION AND NEW WORK PLANS

SCALE: DOCUMENT IS SCALED AS NOTED WHEN ISSUED AS A 24"x26" SHEET.

RELOCATION OF THE CONFUCIUS INSTITUTE TO MANOOGIAN

WSU PROJECT #: 155–270653
WSU BLDG NAME: MANOOGIAN
WSU BLDG #: 155

A/E PROJECT NO. 215048.00

SHEET NO. M–1.0

GENERAL NOTES

1. ALL WIRING IN CONDUITS SHALL RUN CONCEALED UNLESS OTHERWISE NOTED.
2. ALL EQUIPMENT SHALL BE INSTALLED IN A NEAT AND WORKMANLIKE MANNER, RECTILINEAR TO BUILDING STRUCTURE.
3. CONSTRUCTION DOCUMENTS CONSIST OF PLANS, DETAILS, DIAGRAMS, AND SPECIFICATIONS.
4. ALL RACEWAYS AND CABLE TRAYS (IF ANY) RUNNING ACROSS BUILDING EXPANSION JOINTS SHALL BE EQUIPPED WITH EXPANSION FITTINGS.
5. ELECTRICAL SERVICES (HOME RUNS) SHOWN ON THE DRAWINGS ARE SHOWN DIAGRAMMATICALLY, CONTRACTOR SHALL VERIFY ROUTING AND MEET CONDUCTOR FILL/AMAPACITY REQUIREMENTS PER THE NATIONAL ELECTRICAL CODE.
6. CONTRACTOR SHALL REVIEW CONTRACT DOCUMENTS OF ALL TRADES TO DETERMINE SPECIFIC MOUNTING LOCATIONS FOR ELECTRICAL EQUIPMENT, COORDINATE EXACT LOCATION WITH THE ARCHITECTURAL DRAWINGS.
7. REFER TO ARCHITECTURAL PLANS AND ELEVATIONS FOR MOUNTING HEIGHTS AND LOCATION OF ALL DEVICES UNLESS SHOWN ON ELECTRICAL DRAWINGS.
8. PROVIDE ALL REQUIRED SUPPORTS AND MATERIALS TO INSTALL ELECTRICAL DEVICES AND EQUIPMENT. COORDINATE WITH MANUFACTURES SUBMITTALS.
9. ALL ELECTRICAL WIRING FROM THE SERVICE ENTRANCE TO DOWNSTREAM DEVICES SHALL BE COPPER (CU) UNLESS OTHERWISE NOTED ON PLANS.
10. LIGHTING/RECEPTACLE BRANCH CIRCUITS 175 FEET AND FURTHER FROM THEIR ASSOCIATED PANELS SHALL BE FED WITH #10 WIRING MINIMUM. UNLESS OTHERWISE NOTED.
11. PROVIDE LABELING OF CIRCUIT NUMBERS ALL NEW RECEPTACLES AND LOW VOLTAGE CABLING TO MATCH EXISTING.
12. PROVIDE BREAKOUT COST FOR PROVIDING AND INSTALLING CAT 6E PLENUM RATED CABLE PER 100'–0".
13. PROVIDE BREAKOUT COST FOR PROVIDING AND INSTALLING A SINGLE DATA AND PHONE OUTLET.
14. COORDINATE INSTALLATION OF CAT 6E TELE/DATA CABLING WITH OWNER AND WSU C & IT. INSTALLATION TO BE TO WSU C & IT STANDARDS.

LEGEND

	LIGHT FIXTURE
	DASHED INDICATES DEVICE OR FIXTURE TO BE DEMOLISHED OR RELOCATED
	DUPLEX RECEPTACLE
	QUAD RECEPTACLE
	DATA/COM OUTLET
	EXIT LIGHT
S	SINGLE POLE SWITCH
S_3	THREE–WAY SWITCH
F	FIRE ALARM SYSTEM COMBINATION SPEAKER/STROBE DEVICE
F	FIRE ALARM SYSTEM STROBE ONLY DEVICE
(E)	INDICATES EXISTING DEVICE OR FIXTURE TO REMAIN
(R)	INDICATES EXISTING DEVICE OR FIXTURE TO BE RELOCATED
WM	WIREMOLD (OR APPROVED EQUAL) SURFACE MOUNTED JUNCTION BOX AND RACEWAY

TYPICAL DEVICE MOUNTING DETAIL

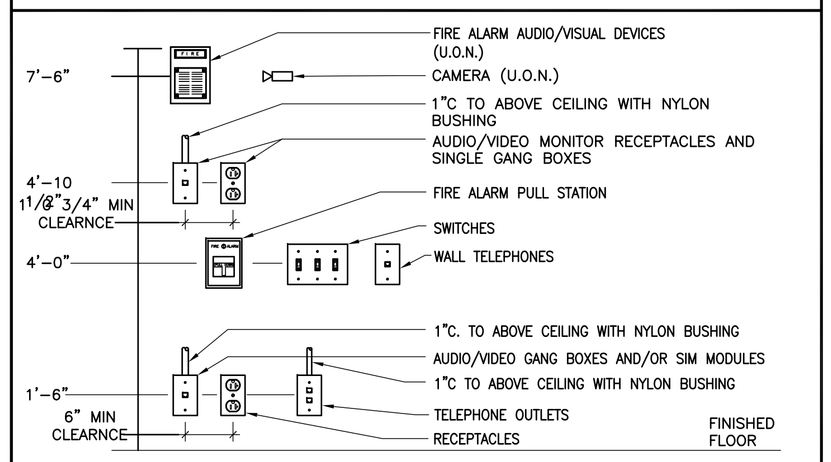

NOTES:

1. ALL MOUNTING HEIGHTS SHALL BE MEASURED FROM FINISHED FLOOR TO CENTERLINE OF DEVICE EXCEPT EXIT SIGNS.
2. DEVICES SHALL BE INSTALLED ON A COMMON VERTICAL CENTERLINE WHEREVER POSSIBLE.
3. ALL DEVICES SHALL BE INSTALLED AT MOUNTING HEIGHTS AS INDICATED ON THIS DETAIL, UNLESS OTHERWISE NOTED.

LUMINAIRE SCHEDULE

TYPE	MANUFACTURER	CATALOG NUMBER	LAMP	TYPE	VOLTS	MOUNTING	DESCRIPTION
FAA	LITHONIA	2AV–G332–SBL–MVOLT–GEB10IS–1/2 – TO MATCH EXISTING	3	F32/T8	MVOLT	LAYIN	RECESSED 2'x4' LAYIN TYPE FLUORECSENT LIGHT FIXTURE WITH STRAIGHT BLADE LOUVER DIFFUSER, TWO BALLASTS FOR DUAL SWITCHING AS INDICATED ON PLAN.

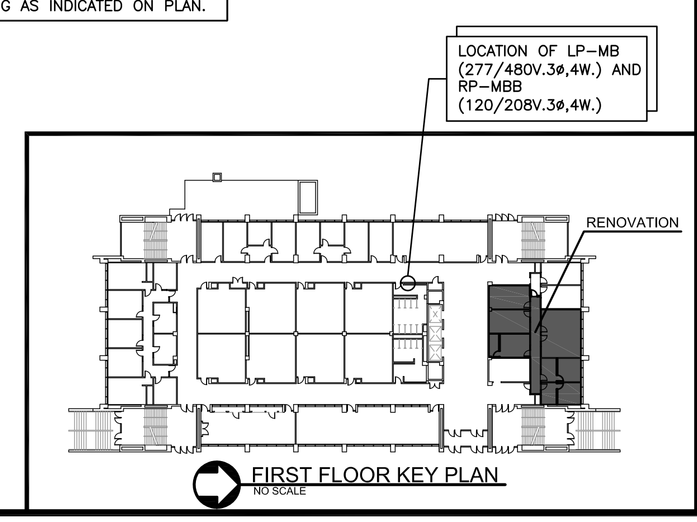

WAYNE STATE UNIVERSITY

Facilities Planning & Management Design Services 5454 Cass Ave. Detroit MI 48202

NSA
Architects
Engineers
Planners

23761 Research Drive
Farmington Hills
Michigan 48335

248.477.2444
248.477.2445 fax
www.nsa-ae.com
Founded 1960

MARK	ISSUE	DATE
	BIDS AND PERMITS	11–09–15
	90% OWNER REVIEW	11–02–15
	80% OWNER REVIEW	10–02–15

DESIGNER	JC
DRAWN	JC
CHECKED	JC
DEPT MGR	
PROJECT MGR	

TITLE:
ELECTRICAL SYMBOL LIST, DETAIL AND GENERAL NOTES

SCALE: DOCUMENT IS SCALED AS NOTED WHEN ISSUED AS A 24"x26" SHEET.

RELOCATION OF THE CONFUCIUS INSTITUTE TO MANOOGIAN

WSU PROJECT #: 155–270653
WSU BLDG NAME: MANOOGIAN
WSU BLDG #: 155

A/E PROJECT NO.
215048.00

SHEET NO.
E–1.0

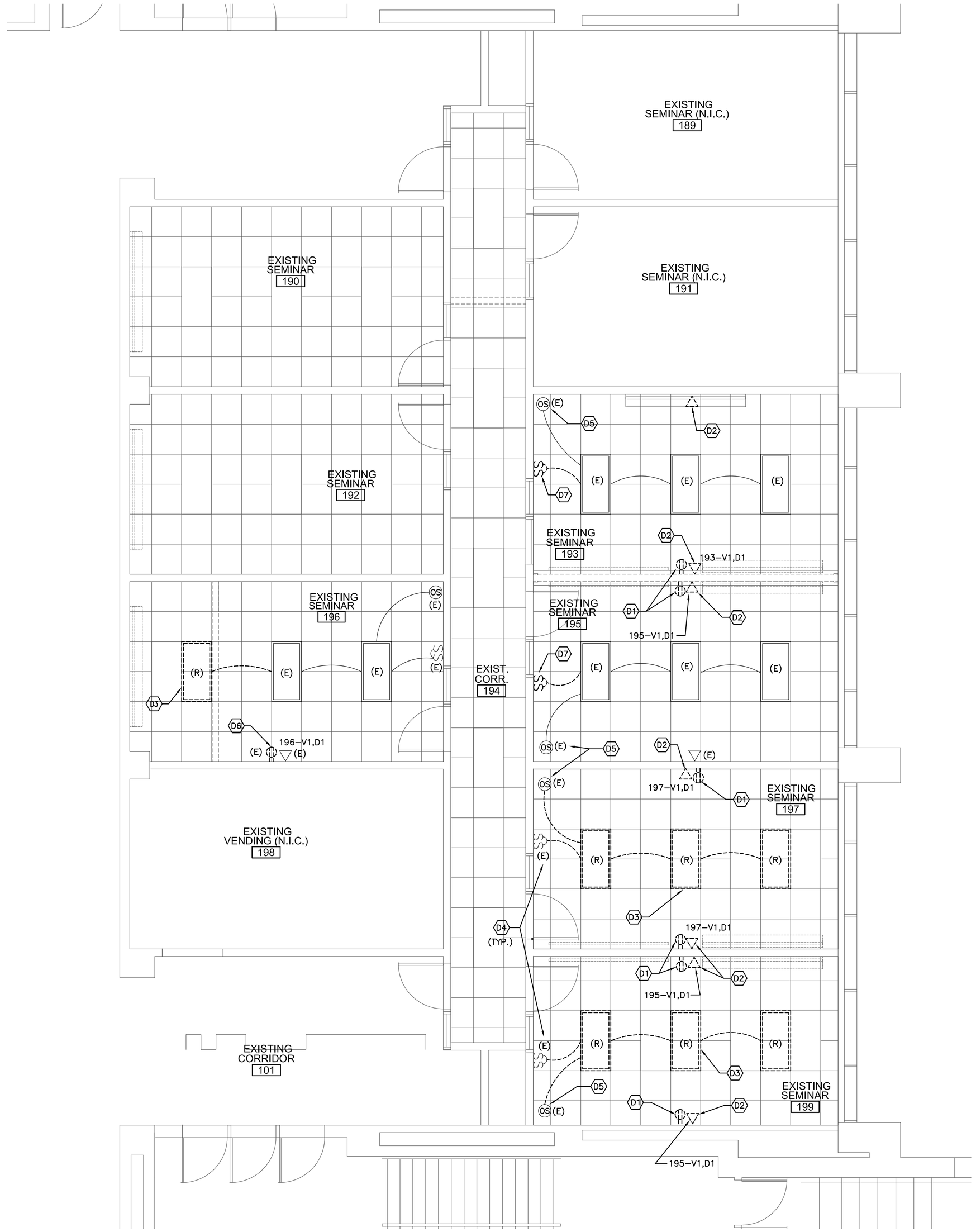

0 2' 4' 8'

ELECTRICAL FLOOR PLAN - DEMOLITION

SCALE: 1/4" = 1'-0"

NORTH

ELECTRICAL DEMOLITION KEYNOTES:

D1 DISCONNECT AND REMOVE FLUSH MOUNTED RECEPTACLE. MAINTAIN SERVICE TO RECEPTACLES DOWNSTREAM THAT ARE TO REMAIN. RE-USE BRANCH CIRCUIT TO SERVE NEW RECEPTACLE.

D2 DISCONNECT AND REMOVE SURFACE MOUNTED LOW VOLTAGE DATA/COMM OUTLET. COORDINATE CABLING REMOVAL/RELOCATION WITH OWNER AND WSU C & IT.

D3 LIGHT FIXTURE TO BE RELOCATED, SEE LIGHT PLAN SHEET E-1.2.

D4 EXISTING LIGHT FIXTURE AND DEVICES, INDICATED WITH – (E), ARE TO REMAIN. LIGHT FIXTURES ARE DUAL SWITCHED, ONE SWITCH CONTROLS ONE LAMP, THE OTHER SWITCH CONTROLS THE OTHER LAMP.

D5 EXISTING CEILING MOUNTED OCCUPANCY SENSOR TO REMAIN.

D6 DISCONNECT WIRING FROM EXISTING BRANCH CIRCUIT AND REWIRE TO A SEPARATE BRANCH CIRCUIT FROM A SPARE 20A. CIRCUIT BREAKER IN RP-MBB, TO SERVE NEW COPIER. MAINTAIN SERVICE TO DEVICES DOWNSTREAM THAT ARE TO REMAIN.

D7 DISCONNECT AN REMOVE SINGLE POLE SWITCHES AND REPLACE WITH NEW THREE-WAY SWITCHES. RE-WIRE AS REQUIRED TO ACCOMMODATE THREE-WAY SWITCHING. SEE SHEET E-1.2 FOR NEW SWITCHING ARRANGEMENT.

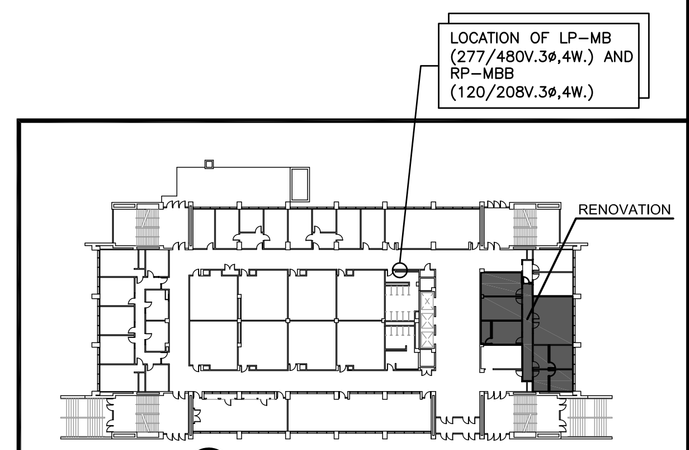

FIRST FLOOR KEY PLAN

NO SCALE

WAYNE STATE UNIVERSITY

Facilities Planning & Management Design Services
5454 Cass Ave.
Detroit MI 48202

NSA
Architects
Engineers
Planners

23761 Research Drive
Farmington Hills
Michigan 48335

248.477.2444
248.477.2445 fax
www.nsa-ae.com
Founded 1960

MARK	ISSUE	DATE
	BIDS AND PERMITS	11-09-15
	90% OWNER REVIEW	11-02-15
	80% OWNER REVIEW	10-02-15

DESIGNER	JC
DRAWN	JC
CHECKED	JC
DEPT MGR	
PROJECT MGR	

TITLE:
ELECTRICAL FLOOR PLAN -DEMOLITION

SCALE: DOCUMENT IS SCALED AS NOTED WHEN ISSUED AS A 24"x26" SHEET.

RELOCATION OF THE CONFUCIUS INSTITUTE TO MANOOGIAN

WSU PROJECT #: 155-270653
WSU BLDG NAME: MANOOGIAN
WSU BLDG #: 155

A/E PROJECT NO.
215048.00

SHEET NO.
E-1.1

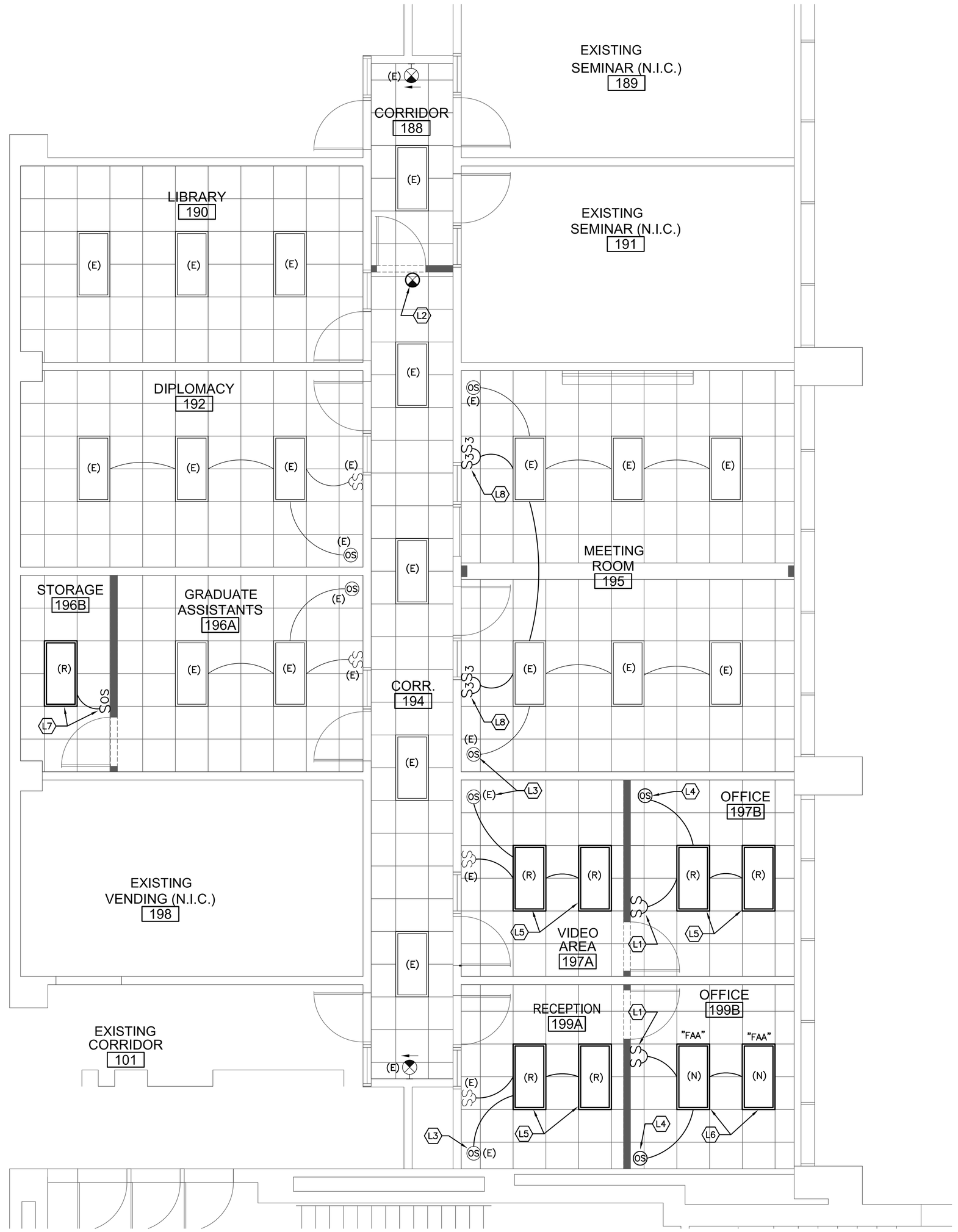

0 2' 4' 8'

ELECTRICAL FLOOR PLAN - LIGHTING

SCALE: 1/4" = 1'-0"

NORTH

LIGHTING KEYNOTES:

L1 NEW FLUSH MOUNTED SINGLE POLE SWITCHES. PROVIDE DUAL SWITCHING TO EXISTING LIGHT FIXTURE, ONE SWITCH TO CONTROL ONE LAMP, THE OTHER SWITCH TO CONTROL THE OTHER LAMP. REUSE EXISTING BRANCH CIRCUIT.

L2 NEW CEILING MOUNTED EXIT LIGHT WITH BATTERY BACK–UP. CONNECT TO BRANCH CIRCUIT PRESENTLY SERVING EXISTING EXIT LIGHTS IN THE AREA. MATCH MANUFACTURE, FINISH AND TYPE OF EXISTING EXIT LIGHTS IN AREA.

L3 EXISTING CEILING MOUNTED OCCUPANCY SENSOR TO REMAIN.

L4 NEW CEILING MOUNTED OCCUPANCY SENSOR, MANUFACTURE AND TYPE TO MATCH EXISTING.

L5 RELOCATED LIGHT FIXTURE RE–USE EXISTING BRANCH CIRCUIT TO SERVE LIGHT FIXTURE VIA NEW CEILING MOUNTED DUAL TECHNOLOGY OCCUPANCY SWITCH.

L6 NEW LIGHTING FIXTURES WITH DUAL BALLASTS, PROVIDE DUAL SWITCHING AS INDICATED.

L7 RELOCATED LIGHT FIXTURE RE–USE EXISTING BRANCH CIRCUIT TO SERVE LIGHT FIXTURE VIA NEW WALL MOUNTED DUAL TECHNOLOGY OCCUPANCY SWITCH.

L8 NEW THREE–WAY SWITCHES, RE–WIRE BRANCH CIRCUIT AS REQUIRED, MAINTAIN DUAL SWITCHING OF LIGHT FIXTURES.

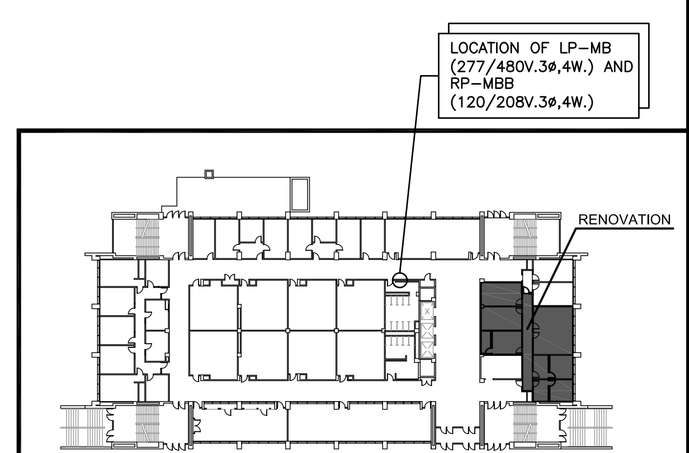

FIRST FLOOR KEY PLAN

NO SCALE

WAYNE STATE UNIVERSITY

Facilities Planning & Management Design Services 5454 Cass Ave. Detroit MI 48202

NSA
Architects
Engineers
Planners

23761 Research Drive
Farmington Hills
Michigan 48335

248.477.2444
248.477.2445 fax
www.nsa-ae.com
Founded 1960

MARK	ISSUE	DATE
	BIDS AND PERMITS	11–09–15
	90% OWNER REVIEW	11–02–15
	80% OWNER REVIEW	10–02–15

DESIGNER	JC
DRAWN	JC
CHECKED	JC
DEPT MGR	
PROJECT MGR	

TITLE:
ELECTRICAL FLOOR PLAN – LIGHTING

SCALE: DOCUMENT IS SCALED AS NOTED WHEN ISSUED AS A 24"x26" SHEET.

RELOCATION OF THE CONFUCIUS INSTITUTE TO MANOOGIAN

WSU PROJECT #: 155–270653
WSU BLDG NAME: MANOOGIAN
WSU BLDG #: 155

A/E PROJECT NO.
215048.00

SHEET NO.
E–1.2

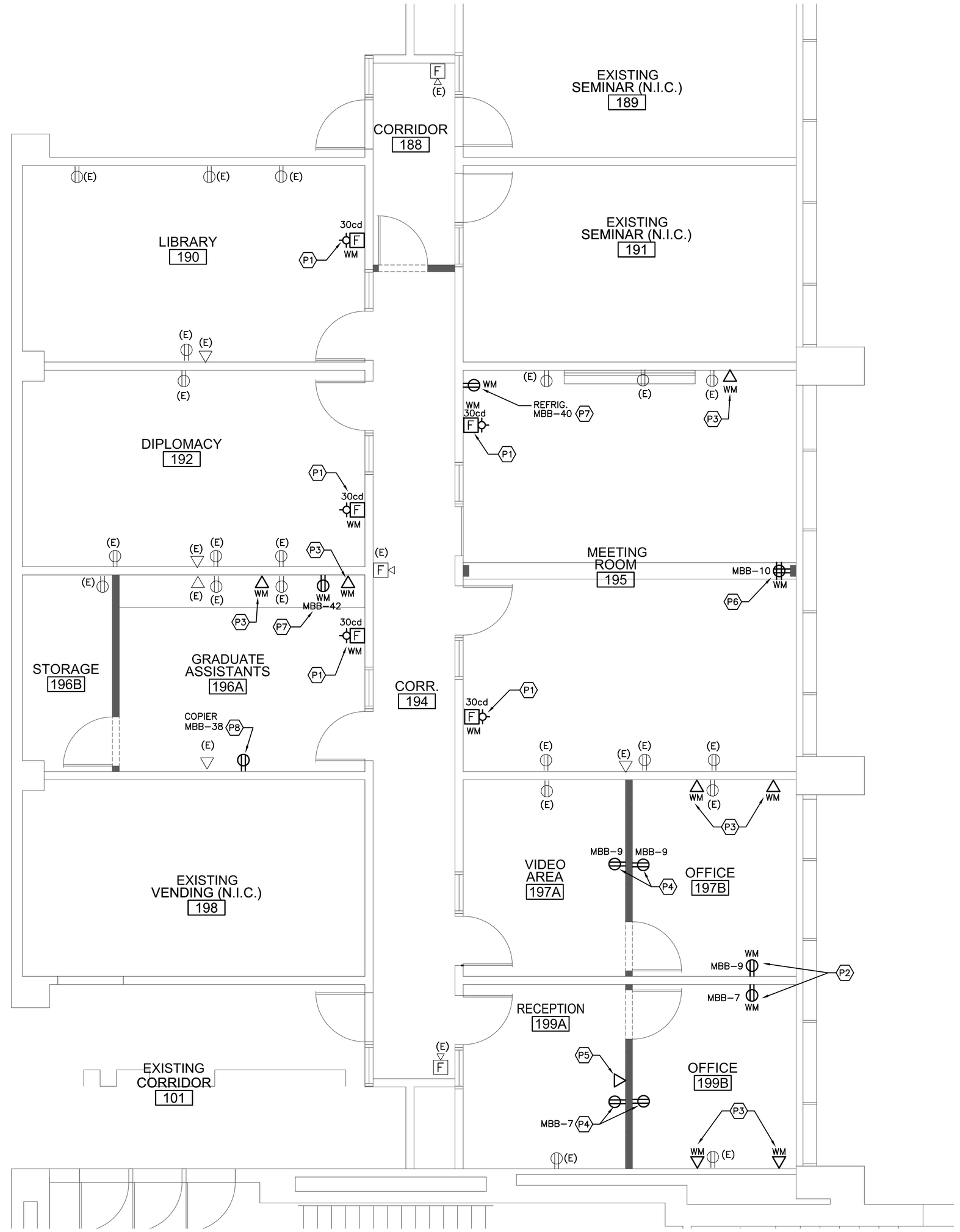

0 2' 4' 8'

ELECTRICAL FLOOR PLAN -POWER

SCALE: 1/4" = 1'-0"

NORTH

POWER KEYNOTES:

P1 PROVIDE AND INSTALL NEW FIRE ALARM SYSTEM STROBE ONLY DEVICE (AND ASSOCIATED WIRING), 30 CANDELA. MOUNT IN A SURFACE MOUNTED WIREMOLD (OR APPROVED EQUAL) V700 BOX WITH SURFACE MOUNTED V700 RACEWAY. PAINT BACKBOX AND RACEWAY RED. MATCH MANUFACTURE OF EXISTING FIRE ALARM SYSTEM SERVING BUILDING.

P2 NEW SURFACE MOUNTED DUPLEX RECEPTACLE MOUNT IN A SURFACE MOUNTED WIREMOLD (OR APPROVED EQUAL) V700 BOX WITH SURFACE MOUNTED V700 RACEWAY. CONNECT TO EXISTING BRANCH CIRCUIT INDICATED THAT PREVIOUSLY SERVED RECEPTACLE THAT WAS REMOVED.

P3 NEW SURFACE MOUNTED DOUBLE GANG WIREMOLD (OR APPROVED EQUAL) V700 JUNCTION BOX WITH SURFACE MOUNTED V700 RACEWAY TO SERVE RELOCATED VOICE AND DATA JACKS AND CABLING. COORDINATE CABLING REQUIREMENTS WITH OWNER AND WSU C & IT.

P4 NEW RECESS FLUSH MOUNTED DUPLEX RECEPTACLE. CONNECT TO EXISTING BRANCH CIRCUIT INDICATED THAT PREVIOUSLY SERVED RECEPTACLE THAT WAS REMOVED.

P5 NEW RECESS FLUSH MOUNTED DOUBLE GANG JUNCTION BOX WITH 1"C. STUBBED INTO CEILING SPACE (BUSH END) TO SERVE RELOCATED VOICE AND DATA JACKS AND CABLING. COORDINATE CABLING REQUIREMENTS WITH OWNER AND WSU C & IT.

P6 NEW SURFACE MOUNTED QUAD RECEPTACLE MOUNT IN A SURFACE MOUNTED WIREMOLD (OR APPROVED EQUAL) V700 BOX WITH SURFACE MOUNTED V700 RACEWAY. CONNECT TO EXISTING BRANCH CIRCUIT INDICATED THAT PREVIOUSLY SERVED RECEPTACLE THAT WAS REMOVED.

P7 NEW SURFACE MOUNTED DUPLEX RECEPTACLE MOUNT IN A SURFACE MOUNTED WIREMOLD (OR APPROVED EQUAL) V700 BOX WITH SURFACE MOUNTED V700 RACEWAY. PROVIDE NEW BRANCH CIRCUIT WIRING AND CONDUIT TO PANEL INDICATED.

P8 EXISTING DUPLEX RECEPTACLE RE-WIRED TO NEW SEPARATE BRANCH CIRCUIT FROM A 20A. SPARE IN PANEL RP-MBB, TO SERVE NEW COPIER.

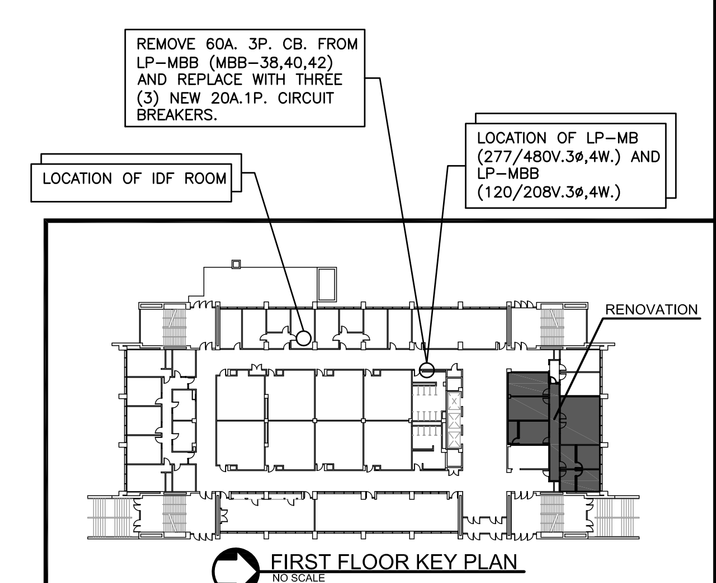

FIRST FLOOR KEY PLAN
NO SCALE

WAYNE STATE UNIVERSITY

Facilities Planning & Management Design Services
5454 Cass Ave.
Detroit MI 48202

NSA
Architects
Engineers
Planners
23761 Research Drive
Farmington Hills
Michigan 48335
248.477.2444
248.477.2445 fax
www.nsa-ae.com
Founded 1960

MARK	ISSUE	DATE
	BIDS AND PERMITS	11-09-15
	90% OWNER REVIEW	11-02-15
	80% OWNER REVIEW	10-02-15

DESIGNER	JC
DRAWN	JC
CHECKED	JC
DEPT MGR	
PROJECT MGR	

TITLE:
ELECTRICAL FLOOR PLAN - POWER

SCALE: DOCUMENT IS SCALED AS NOTED WHEN ISSUED AS A 24"x26" SHEET.

RELOCATION OF THE CONFUCIUS INSTITUTE TO MANOOGIAN

WSU PROJECT #: 155-270653
WSU BLDG NAME: MANOOGIAN
WSU BLDG #: 155

A/E PROJECT NO.
215048.00

SHEET NO.
E-1.3