CONTRACT DOCUMENTS
FOR
WAYNE STATE UNIVERSITY

612 - SCOTT HALL BUILDING

WSU PROJECT No. 612-248862

ELECTRICAL RELIABILITY UPGRADES - BID PACKAGE No. 6

ADDENDUM 1 1-29-2015

OWNER

WAYNE STATE UNIVERSITY

Facilities Planning & Management
Design & Construction Services
5454 Cass Avenue
Detroit Mi 48202

CONSULTANT

Commonwealth associates, inc.
www.cai-engr.com

2700 W. Argyle Street
Jackson, Michigan 49202
Office: (517) 788-3000
Fax: (517) 788-3003

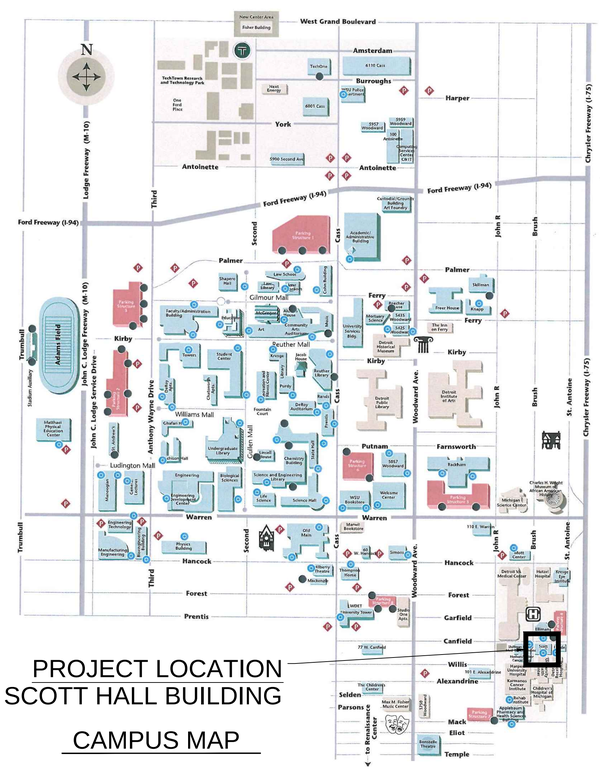

PANEL NUMBER: **UPS-MDP**

MAINS: **250** AMP MAIN CIRCUIT BREAKER
VOLTAGE: **480** Y-120 VOLT, 3 PHASE, 4 WIRE, 60 HERTZ
NEUTRAL: 100 % OF MAIN BUS RATING
INTERRUPTING: 10,000 KAIC
PANEL TYPE: I-LINE (BASED ON SQUARE-D)

FILE NO.:
PROJECT: SCOTT HALL
PANEL LOCATION: BASEMENT ROOM 0350
PANEL MOUNTING: SURFACE
GRD. BUS: NON-ISOLATED

CKT #	480-208/120 DESCRIPTION	LOAD VA	WIRE LENGTH	WIRE & CONDUIT SIZE HOT	NEUT	GRD	CONDUIT	% DROP	CIRCUIT BREAKER	# POLES	PHASE	CIRCUIT BREAKER	# POLES	WIRE & CONDUIT SIZE HOT	NEUT	GRD	CONDUIT	% DROP	WIRE LENGTH	LOAD VA	DESCRIPTION	CKT NO
1											A											2
3	UPS-RP-2 Via UPS-T-2	27300	330	2	2	8	1 1/2	1.9%	100	3	B	150	3	1/0	1/0	6	2	0.4%	360	35500	UPS-RP-3 Via UPS-T-3	4
5											C											6
7											A											8
9	UPS-RP-6 Via UPS-T-6	14600	450	2	2	8	1 1/2	0.3%	100	3	B	100	3	2	2	8	1 1/2	0.0%	420	14900	UPS-RP-5 Via UPS-T-5	10
11											C											12
13											A											14
15	UPS-RP-8 Via UPS-T-8	6800	510	6	6	8	1 1/4	0.4%	50	3	B	50	3	6	6	8	1 1/4	0.0%	480	2300	UPS-RP-7 Via UPS-T-7	16
17											C											18
19											A											20
21	UPS-RP-9 Via UPS-T-9	5300	540	6	6	8	1 1/4	0.3%	50	3	B	50	3	6	6	8	1 1/4	0.0%	460	1500	UPS-RP-4 Via UPS-T-4	22
23											C											24
25											A											26
27											B											28
29											C											30
31											A											32
																				54200	SUBTOTALS (VA)	

SUBTOTALS (VA)	54000		
CONNECTED LOADS (KVA)	108		
DESIGN FACTORS	1		
DESIGN LOADS (KVA)	135		
DEMAND FACTORS	1		
DEMAND LOADS (KVA)	135		
TOTAL CONNECTED LOAD	108	131	AMPS
TOTAL DESIGN LOAD	135	163	AMPS
TOTAL DEMAND LOAD	135	**163**	AMPS

	HOT	NEUT	GRD	CND
FDR SIZE:	250	250	2	3
FDR LENGTH:	**40**			
% VOLT DROP:	0.1%			

MIN FDR/OCPD SIZE: 250 AMP 3 POLE

PANEL NUMBER
UPS-MDP

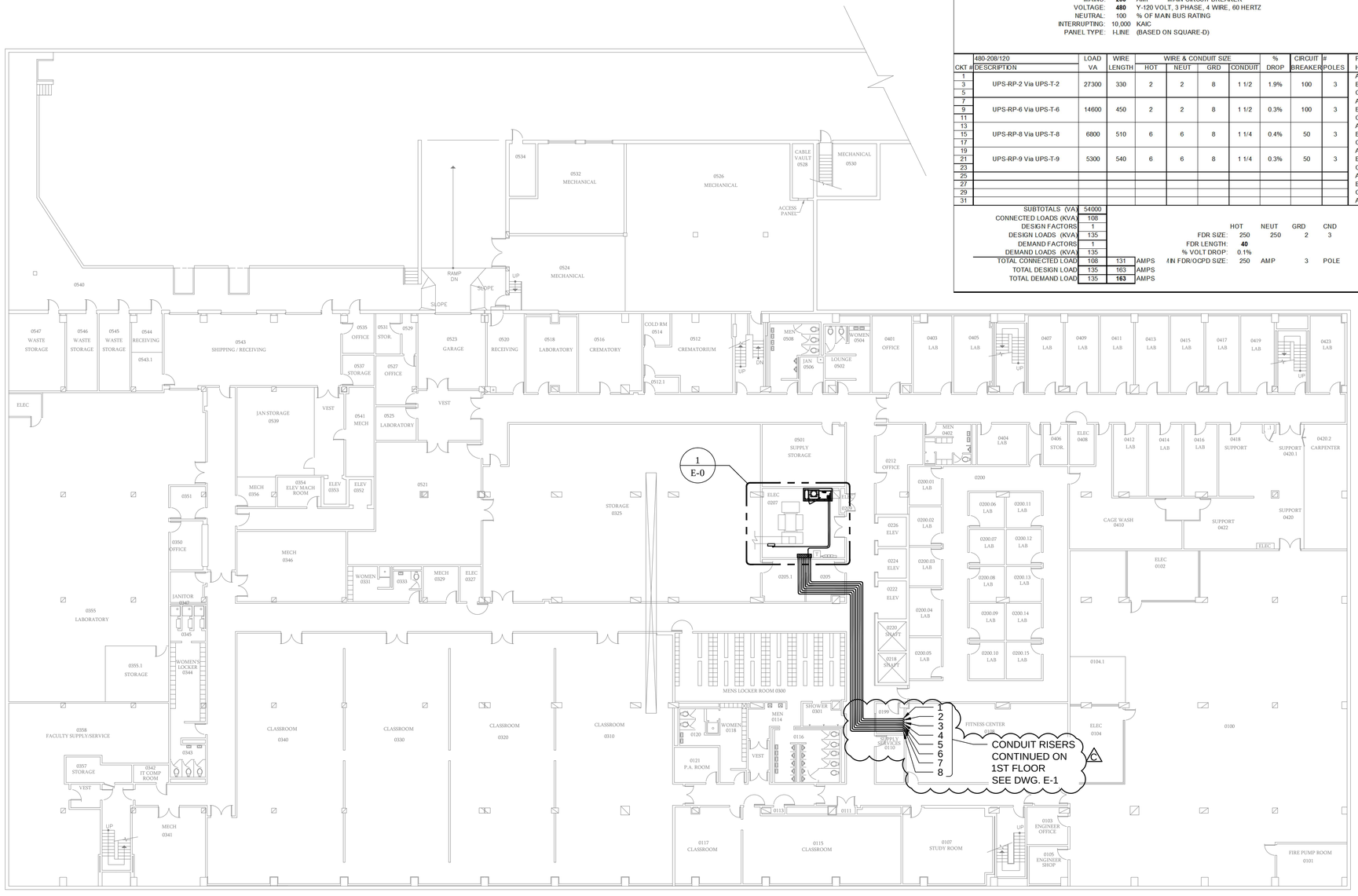

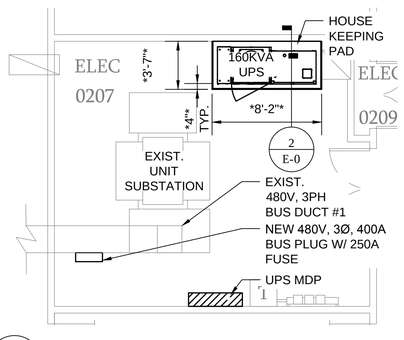

1 / E-0 ENLARGED ROOM 0207 PLAN

SCALE: 3/16" = 1'-0"

0 5' 10' 15'

* - ASTERISK DENOTES DIMENSIONS THAT MUST BE COORDINATED WITH APPROVED EQUIPMENT SHOP DRAWINGS PRIOR TO POURING HOUSEKEEPING PAD.

NORTH

BASEMENT FLOOR LEVEL-EL. = 138'-0"

SCALE: 1/16" = 1'-0"

0 10' 20' 30'

- ○ 1 FROM UPS-MDP TO UPS-RP-2
- ○ 2 FROM UPS-MDP TO UPS-RP-3
- ○ 3 FROM UPS-MDP TO UPS-RP-4
- ○ 4 FROM UPS-MDP TO UPS-RP-5
- ○ 5 FROM UPS-MDP TO UPS-RP-6
- ○ 6 FROM UPS-MDP TO UPS-RP-7
- ○ 7 FROM UPS-MDP TO UPS-RP-8
- ○ 8 FROM UPS-MDP TO UPS-RP-9

CONDUIT RISER DETAIL

SCALE: N.T.S

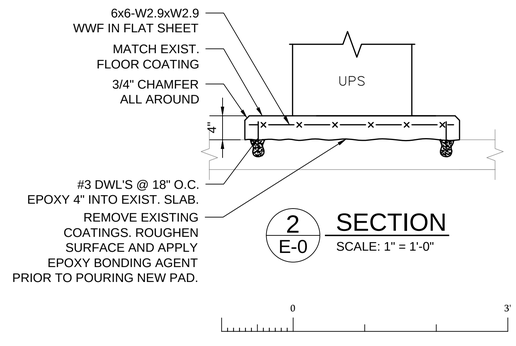

2 / E-0 SECTION

SCALE: 1" = 1'-0"

NOTES:

1. SEE DRAWING G-1 FOR GENERAL NOTES AND LEGEND.
2. SEE DRAWING E-103 FOR TYPICAL ELECTRICAL DETAILS.
3. EXISTING RECEPTACLES DESIGNATED TO BE FOR THE UPS TO HAVE NEW CONDUIT AND WIRE INSTALLED FROM THE NEW UPS RECEPTACLES PANEL TO THE NEW RECEPTACLE. RECEPTACLES NOT DESIGNATED FOR UPS BUT PRESENTLY SHARING THE EXISTING CIRCUIT ARE TO BE DISCONNECTED FROM THE UPS RECEPTACLE, AND ARE TO MAINTAIN THEIR CONNECTION TO THE EXISTING PANEL.
4. NOT USED
5. NOT USED
6. NOT USED
7. CORE DRILLING SHALL BE COORDINATED WITH WSU REP AND ADJACENT CORED HOLES TO BE NO CLOSER THAN 2 TIMES DIAMETER SPACING.
8. SEE UPS RISER DIAGRAM ON DWG. E-102 FOR DIAGRAMMATIC VIEW OF CONDUIT ENTERING AND EXITING ROOMS.
9. PROVIDE FIRE STOPPING AROUND ALL CONDUITS AND AROUND ALL SLEEVES PASSING THROUGH FIRE RATED WALLS AND FLOORS PER SHT. G-1.
10. INSTALL CONDUIT RISER IN A LOCATION AND MANNER THAT DOES NOT CAUSE INTERFERENCE WITH EXISTING ACCESS, EQUIPMENT, DEVICES, ETC. COORDINATE WITH WSU REP.
11. COORDINATE WITH WSU REP FOR ENTRY INTO RESTRICTED AREAS.
12. INSTALL CONDUIT IN CEILING. MATCH AND REPLACE DAMAGED TILES. PATCH AND PAINT AS REQUIRED DAMAGE TO WALLS AND CEILING.
13. CEILINGS IN HALLWAYS HAVE DROP CEILINGS APPROXIMATELY 9 FEET AFF AND CLASSROOMS/LABS HAVE EXPOSED CEILINGS AT.
14. PROVIDE VERTICAL CABLE SUPPORT WHERE RISERS EXTENDED MORE THAN 100FT. SEE DWG. E-103 FOR TYPICAL DETAILS.

Commonwealth associates, inc.
www.cai-engr.com
2700 W. Argyle Street
Jackson, Michigan 49202
Office: (517) 788-3000
Fax: (517) 788-3003

WAYNE STATE UNIVERSITY

612 - SCOTT HALL BUILDING
540 E. CANFIELD
ELECTRICAL RELIABILITY UPGRADES PROJ. No. 612-248862

WAYNE STATE UNIVERSITY
FACILITIES PLANNING & MANAGEMENT
5454 CASS AVENUE DETROIT, MICHIGAN

DRAWN BY	PROJECT LEAD
DLM	DA
DESIGNED BY	REVIEWED BY
DHP	JDM
APPROVED BY	DATE

MARK	ISSUED FOR/REVISIONS	DATE
A	OWNER REVIEW	1-9-2015
B	FOR BID	1-21-2015
C	ADDENDUM 1	1-29-2015

Engineers Seal

CLIENT PROJECT NO.: 612-248862
PROJECT NO.: 320006
SCALE: AS SHOWN

SHEET TITLE: BASEMENT FLOOR PLAN

SHEET NO.: E-0
REV NO.: C

FILE NAME: C:\pw_work\pw_proj\jashinn\d0449333\E-0.dwg ■ PLOTTED DATE: 1/29/2015 4:06 PM ■ PLOTTED BY: Joseph A. Shinn ■

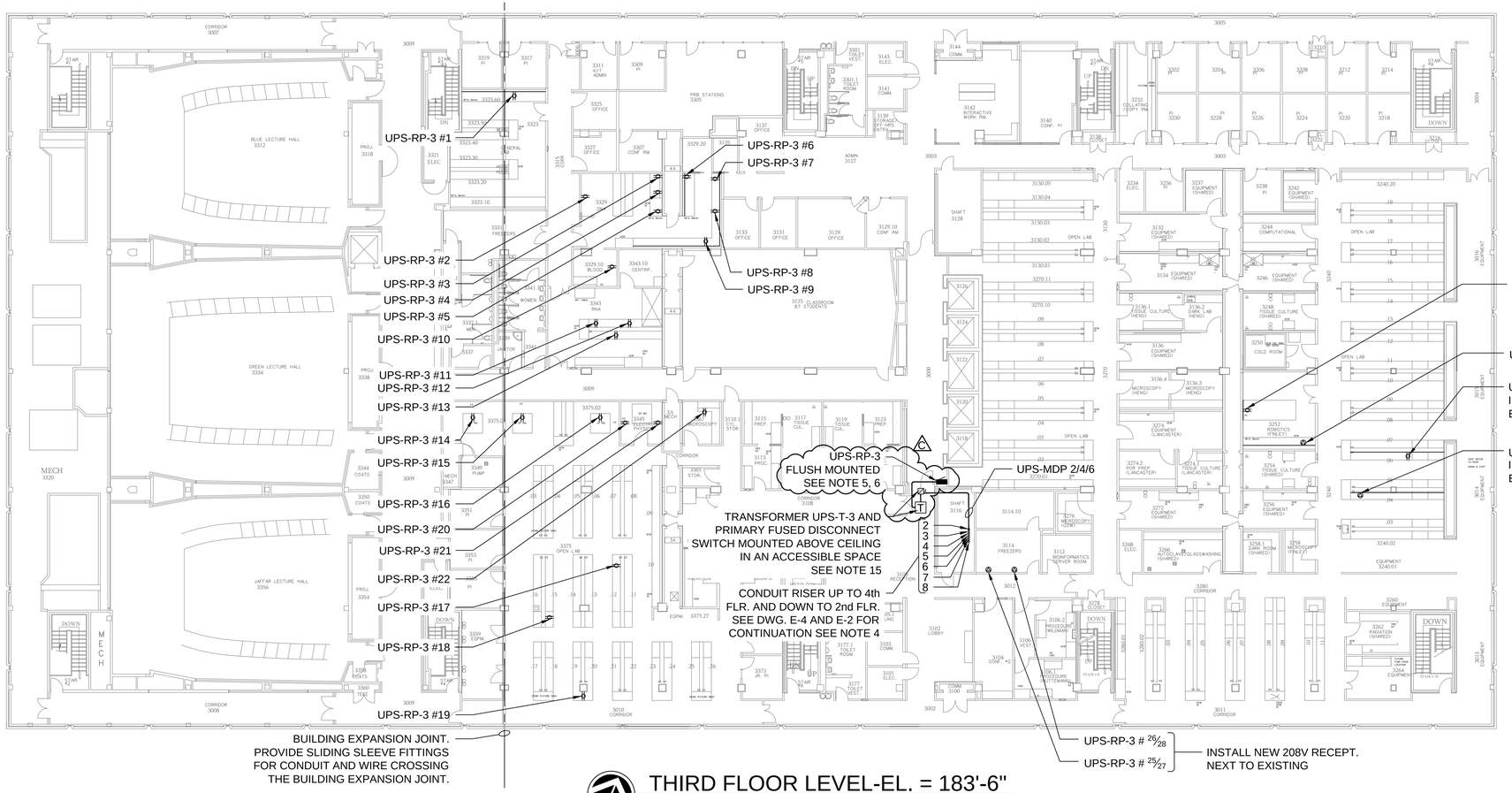

THIRD FLOOR LEVEL-EL. = 183'-6"

SCALE: 1/16" = 1'-0"

0 10' 20' 30'

○ 2 FROM UPS-MDP TO UPS-RP-3
○ 3 FROM UPS-MDP TO UPS-RP-4
○ 4 FROM UPS-MDP TO UPS-RP-5
○ 5 FROM UPS-MDP TO UPS-RP-6
○ 6 FROM UPS-MDP TO UPS-RP-7
○ 7 FROM UPS-MDP TO UPS-RP-8
○ 8 FROM UPS-MDP TO UPS-RP-9

CONDUIT RISER DETAIL

SCALE: N.T.S

PANEL NUMBER: **UPS-RP-3**

MAINS: **150** AMP MAIN CIRCUIT BREAKER
VOLTAGE: **208** Y-120 VOLT, 3 PHASE, 4 WIRE, 60 HERTZ
NEUTRAL: 100 % OF MAIN BUS RATING
INTERRUPTING: 10,000 KAIC
PANEL TYPE: I-LINE (BASED ON SQUARE-D)

FILE NO.:
PROJECT: SCOTT HALL
PANEL LOCATION: THIRD FLOOR
PANEL MOUNTIMG: FLUSH
GRD. BUS: NON-ISOLATED

CKT #	120/208 DESCRIPTION	LOAD VA	WIRE LENGTH	WIRE & CONDUIT SIZE HOT	NEUT	GRD	CONDUIT	% DROP	CIRCUIT BREAKER	# POLES	P H	CIRCUIT BREAKER	# POLES	WIRE & CONDUIT SIZE HOT	NEUT	GRD	CONDUIT	% DROP	WIRE LENGTH	LOAD VA	DESCRIPTION	CKT NO
1	3323.6 Isothermal Titration Calorimtr	360	180	12	12	12	3/4	1.5%	20	1	A	20	1	12	12	12	3/4	2.3%	160	600	3329 QiaCube	2
3	3329 Bioanalyzer	600	160	12	12	12	3/4	2.3%	20	1	B	20	1	10	10	12	3/4	2.9%	160	1200	3329 Thermocycler	4
5	3329 Real Time PCR Machine	900	160	10	10	12	3/4	2.2%	20	1	C	20	1	12	12	12	3/4	2.3%	160	600	3329 Nexl Seq 500	6
7	3329 Eppendorf Centrifuge	1050	160	10	10	12	3/4	2.6%	20	1	A	20	1	8	8	12	3/4	2.3%	160	1500	3329 Nucleofector	8
9	3329 Eppendorf Heater/Shaker	90	160	12	12	12	3/4	0.3%	20	1	B	20	1	8	8	12	3/4	2.0%	160	1300	3329.1 Eppendorf Centrifuge	10
11	3343 Pyromark 024	40	140	12	12	12	3/4	0.1%	20	1	C	20	1	12	12	12	3/4	0.2%	140	48	3343 Glomax & Laptop	12
13	3343 Sonicator	700	140	12	12	12	3/4	2.3%	20	1	A	20	1	8	8	12	3/4	1.9%	120	1650	3375.01 Electrophysiology Rig	14
15	3375.01 Electrophysiology Rig	1650	110	10	10	12	3/4	2.8%	20	1	B	20	1	10	10	12	3/4	2.5%	100	1650	3375.02 Electrophysiology Rig	16
17	3375 BioRad Thremocycler	850	100	12	12	12	3/4	2.0%	20	1	C	20	1	12	12	12	3/4	2.3%	110	900	3375 Biosys RT-QPCR Machine	18
19	3375 BioRad Versa Doc Imaging	350	120	12	12	12	3/4	1.0%	20	1	A	20	1	12	12	12	3/4	2.3%	60	1650	3345 Electrophysiology Rig	20
21	3345 Confocal Microscope	1200	50	12	12	12	3/4	1.4%	20	1	B	20	1	12	12	12	3/4	1.1%	40	1200	3367 Confocal Microscope	22
23	3352 Miomex FX Robot	180	110	12	12	12	3/4	0.5%	20	1	C	20	1	12	12	12	3/4	2.4%	140	720	3240 Seahorse	24
25	3114 Computer Clusters	4000	120	10	---	10	3/4	2.4%	25	2	A	25	2	10	---	10	3/4	2.0%	100	4000	3114 Computer Clusters	26
27											B											28
29	3352 MJR Thermal Chiller	3300	110	12	---	12	3/4	2.9%	20	2	C	20	2	10	---	12	3/4	2.6%	160	3200	3240 Biorad Therad Z Thermal Chiller	30
31											A											32
33											B											34
35											C											36
37											A											38
39											B											40
41											C											42

SUBTOTALS (VA)	15270		
CONNECTED LOADS (KVA)	35		
DESIGN FACTORS	1		
DESIGN LOADS (KVA)	44		
DEMAND FACTORS	1		
DEMAND LOADS (KVA)	44		
TOTAL CONNECTED LOAD	35	99	AMPS
TOTAL DESIGN LOAD	44	123	AMPS
TOTAL DEMAND LOAD	44	**123**	AMPS

	HOT	NEUT	GRD	CND
FDR SIZE:	1/0	1/0	6	2
FDR LENGTH:	**20**			
% VOLT DROP:	0.2%			
MIN FDR/OCPD SIZE:	150 AMP		3	POLE

20218	SUBTOTALS (VA)

PANEL NUMBER
UPS-RP-3

NOTES:

1. SEE DRAWING G-1 FOR GENERAL NOTES AND LEGEND
2. SEE DRAWING E-103 FOR TYPICAL ELECTRICAL DETAILS
3. EXISTING RECEPTACLES DESIGNATED TO BE FOR THE UPS TO HAVE NEW CONDUIT AND WIRE INSTALLED FROM THE NEW UPS RECEPTACLES PANEL TO THE NEW RECEPTACLE. RECEPTACLES NOT DESIGNATED FOR UPS BUT PRESENTLY SHARING THE EXISTING CIRCUIT ARE TO BE DISCONNECTED FROM THE UPS RECEPTACLE, AND ARE TO MAINTAIN THEIR CONNECTION TO THE EXISTING PANEL.
4. ACCESS INTO CHASE AT FIRST FLOOR AND THIRD FLOOR TO BE THROUGH UPPER AND LOWER FLOOR ACCESS WAYS.
5. EXISTING FIRE EXTINGUISHER TO BE RELOCATED FOR INSTALLATION OF NEW UPS-RP PANEL. WALL TO BE REPAIRED AND PAINTED TO MATCH. REINSTALL FLUSH MOUNT FIRE EXTINGUISHER AND SIGNAGE TOWARD CORRIDOR EXIT TO PROVIDE CLEAR INTALLATION OF UPS-RP-3. C
6. LIGHT SWITCH TO BE RELOCATED TOWARD CORRIDOR DOOR TO PROVIDE CLEAR INSTALLATION OF UPS-RP-3 PANEL.
7. CORE DRILLING SHALL BE COORDINATED WITH WSU REP AND ADJACENT CORED HOLES TO BE NO CLOSER THAN 2 TIMES DIAMETER SPACING.
8. SEE UPS RISER DIAGRAM ON DWG. E-102 FOR DIAGRAMMATIC VIEW OF CONDUIT ENTERING AND EXITING ROOMS.
9. PROVIDE FIRE STOPPING AROUND ALL CONDUITS AND AROUND ALL SLEEVES PASSING THROUGH FIRE RATED WALLS AND FLOORS PER SHT. G-1.
10. INSTALL CONDUIT RISER IN A LOCATION AND MANNER THAT DOES NOT CAUSE INTERFERENCE WITH EXISTING ACCESS, EQUIPMENT, DEVICES, ETC. COORDINATE WITH WSU REP.
11. COORDINATE WITH WSU REP FOR ENTRY INTO RESTRICTED AREAS.
12. INSTALL CONDUIT IN CEILING. MATCH AND REPLACE DAMAGED TILES. PATCH AND PAINT AS REQUIRED DAMAGE TO WALLS AND CEILING.
13. THIS FLOOR HAS RECENTLY BEEN RENOVATED WITH DROP CEILINGS THROUGHOUT HALLWAYS AND LABS.
14. NOT USED
15. AFFIX 5"X8" LAMACOID SELF ADHESIVE NAMEPLATE TO WALL, NEAR CEILING DIRECTLY BELOW TRANSFORMER AND DISCONNECT SWITCH. NAMEPLATE TO READ "UPS TRANSFORMER AND DISCONNECT IN CEILING ABOVE. NAMEPLATE TO BE WHITE WITH BLACK LETTERING.

Commonwealth associates, Inc.
www.cai-engr.com
2700 W. Argyle Street
Jackson, Michigan 49202
Office: (517) 788-3000
Fax: (517) 788-3003

WAYNE STATE UNIVERSITY

612 - SCOTT HALL BUILDING
540 E. CANFIELD
ELECTRICAL RELIABILITY UPGRADES PROJ. No. 612-248862

WAYNE STATE UNIVERSITY
FACILITIES PLANNING & MANAGEMENT
5454 CASS AVENUE DETROIT, MICHIGAN

DLM DRAWN BY	DA PROJECT LEAD
DHP DESIGNED BY	JDM REVIEWED BY
APPROVED BY	DATE

MARK	ISSUED FOR/REVISIONS	DATE
A	OWNERS REVIEW	1-9-2015
B	FOR BID	1-21-2015
C	ADDENDUM 1	1-29-2015

Engineers Seal

612-248862
CLIENT PROJECT NO.
320006
PROJECT NO.
AS SHOWN
SCALE

SHEET TITLE
THIRD FLOOR PLAN

SHEET NO.
E-3

REV NO.
C

FILE NAME: C:\pw_work\pw_pro\jashinn\d0449333\E-3.dwg PLOTTED DATE: 1/29/2015 4:15 PM PLOTTED BY: Joseph A. Shinn